Fisher™ LP-Gas Technologies

Regulators and Equipment, LPG/NH_3

LP-31 Buyer's Guide



The industry leader for dependable products and technical service.

FISHER™

EMERSON™

Solving Your Toughest Challenges

Industries are under constant pressure to cut costs, increase output, reduce energy use and improve safety and emissions. That is why companies around the world turn to Emerson Automation Solutions for technologies, services and expertise to solve problems and deliver proven results.

Expertise and Innovation To Deliver Proven Results

Emerson Automation Solutions is the automation innovator with the depth of expertise and breadth of technologies to take on our customers' toughest challenges and bring predictable success anytime, anywhere.



Capital Projects

Accelerate ROI and deliver projects confidently with Project Certainty.

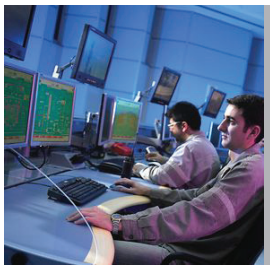

Operational Excellence

Safely optimize production with improved reliability and lower emissions.

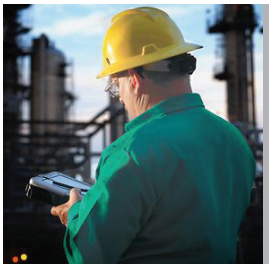

Industrial IoT

Harness the digital revolution for real-time insights and borderless expertise.

Industry Served

Products, Services and Expertise to Meet your Needs

For more than a century we've worked side-by-side with customers to understand their challenges and help implement effective solutions. This wealth of experience enables us to provide a broad range of industry-specific products and services — and the expertise to put them to work for you.



Alternative Energy



Chemical



Food and Beverage



Industrial Energy



Life Sciences



Marine



Metals and Mining



Oil and Gas



Power



Pulp and Paper



Refining



Water and Wastewater

Control Your System with Certainty

Emerson brings together technology and engineering to provide an expanding array of innovative manufacturing and processing solutions for industrial, commercial and consumer markets. We offer the world's largest collection of pressure control, flow control and relief valve solutions for process and specialty gases, liquids, steam, natural gas and liquid propane industries.

Our regulators are renowned for setting industry standards for performance and extended service life, while Emerson product sales, service and technical support teams are unrivaled in their ability to serve you locally from offices located strategically around the globe.

Natural Gas Solutions

Emerson leads the way in providing best in-class natural gas conditioning, metering, pressure regulating products and customized skids to the natural gas industry. From regulators to skids, Emerson products offer design innovation, superior performance and unbeatable reliability and durability under extreme conditions in even the world's most rugged environments. Around the clock, around the world, look to Emerson for natural gas solutions.

LP-Gas Solutions

Throughout the world, Emerson supplies leading liquefied petroleum gas (LP-Gas) suppliers with the broadest available line of Fisher™ commercial service LP-Gas regulators and bulk storage and transport equipment. Renowned as the propane industry standard for reliable pressure regulation, Fisher LP-Gas valves and regulators provide high value solutions across a range of stationary storage and mobile applications. With more than 2,000 technical experts at over 200 locations worldwide, our service and support remains second to none.

Gas, Liquid and Steam Solutions

Emerson offers a dynamic range of direct- and pilot-operated pressure regulators, relief valves and tank management products for industrial gas, liquid and steam applications. Suitable for use in a wide range of environments, from the wellhead to the pharmaceutical plant, their versatility, stability, ease of maintenance and rigorous adherence to ISO-9001 standards for quality and reliability have made them the pressure regulators of choice in tens of thousands of installationsworldwide.

A Complete Line of Valves, Actuators and Regulators



Natural Gas Solutions

- Pressure Reducing Regulators
- Relief Valve / Backpressure Regulators
- Odorant Injection Systems
- Slam-Shut Valves



LPG Solutions

- Regulators / Changeovers / Manifolds
- Valves / Relief Valves
- Bulk Storage and Transport Equipment

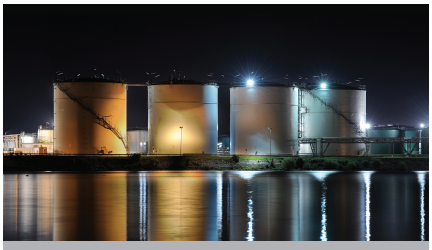

Industrial Gas, Liquid and Steam and Tank Solutions

- Pressure Reducing Regulators
- Backpressure/Relief Regulators
- Vacuum Regulators

www.Emerson.com

EMERSON

Emerson

Quality

Emerson ensures the highest quality and safety standards through our global brands – Fisher™, Crosby™, Yarway™, Anderson Greenwood™, Penberthy™ and our regional specific brands Enardo™ and Jeon.

For more than a century we have worked side-by-side with customers to understand their challenges and help implement effective solutions. Our systems, processes and employees are committed to providing defect-free products, information and services that satisfy your expectations on time, every time.

Emerson is dedicated to delivering only the highest product quality and performance utilizing efficient operations. We create value by delivering best-in-class pressure and flow control equipment, systems, services and solutions for an unparalleled range of applications. We execute new product development plans with advanced technologies and solutions that deliver undisputed quality.

To achieve consistent operational and product excellence globally we strive to attract the most talented people and support continuous development of our workforce, products and processes at every level.

Reliability

With more than 125 years of experience, Emerson has built a solid reputation for reliability.

Our regulators, valves and flow control systems are engineered to exacting standards, each carefully designed, thoroughly tested and developed to handle higher pressures while providing increased delivery capacity, reduced noise output and zero emission. We go beyond baseline industry standards to ensure our equipment operates reliably in even the most extreme conditions anywhere in the world.

At Emerson, we are committed to continually raising the bar in our efforts to develop still higher quality, more advanced systems that operate safely and reliably well into the future.

Technology

Emerson's innovative technologies creates pressure and flow control solutions more productive, efficient and cost-effective. Our proven results are what make us the leader in the industry.

Spanning the globe, our test and evaluation facilities provide the engineering expertise required to ensure superior quality product design and high performance results wherever our products are deployed. At these facilities, we test all sizes and types of regulators under real-world plant conditions to ensure production performance, efficiency, environmental compliance and safety before actual installation at your site.

Our test and evaluation facilities are dedicated to tackling the toughest engineering challenges facing today's process manufacturing and energy industries, including helping companies deliver record volumes of natural gas and other forms of energy, consume less energy, reduce costs, operate more quietly and reduce greenhouse emissions.

Service

With over 2,000 local technical experts to serve you from nearly 200 locations around the world, our sales and service network is one of the largest in the industry.

Whether you need an emergency replacement regulator or need expert assistance on a long-range growth and expansion plan, there is a local Sales Office to respond quickly and professionally.

Regulators and Relief Valves Facilities

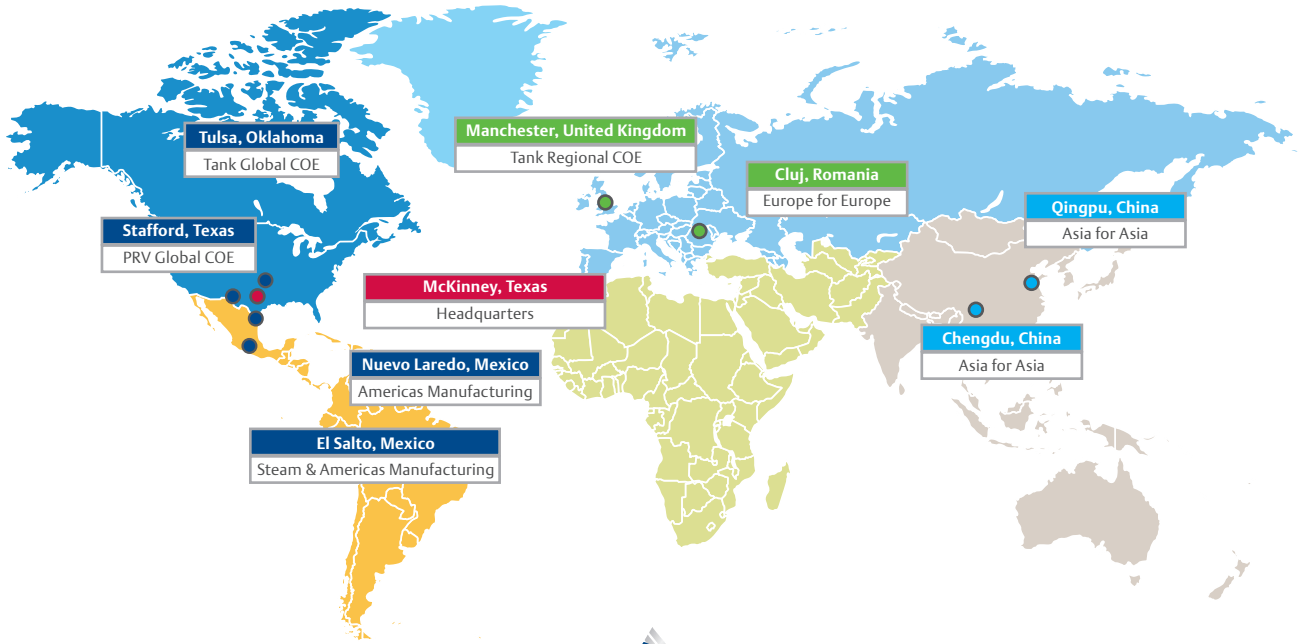

In 1880, Fisher™ Controls was founded in Marshalltown, Iowa, by William Fisher. Fisher Controls grew steadily over the years, evolving into an industry leader offering customers the most complete range of flow control products in the world.

William Fisher came to America from England as a boy of 14. As his family ventured west in the new land, they settled along the Mississippi in Clinton, Iowa. It was there, as a mechanic in a small engine shop for 10 years, that William learned about steam, the major source of power in the late 1800s. Because of his experience in water and steam, William, who was 24 at the time, was invited to Marshalltown to help install the water works.

The idea of a control device was born in the engineer's mind as a fire raged in the city. Working through the night, William Fisher hand-throttled the steam-driven pumps to maintain pressure in the city's mains. During that fire, he saw a need for a device that would both control the steam-driven pumps and maintain them at a constant pressure. Many months and trials later, William Fisher was finally satisfied with one of his designs and began manufacturing what we know today as the Fisher Type 1 constant pressure pump governor. He was granted a patent in 1884.

One thing remained the same since William Fisher's first Type 1 pump governor: a pledge to unequalled quality. Today, the brand name Fisher is synonymous with quality throughout the world.



Type 1 Pump Governor 1880

The Fisher Years

1880 Type 1 pump governor is invented by William Fisher.
1888 The Fisher Governor Company is incorporated on Dec. 26.
1906 William Fisher dies. His wife, Martha, becomes president.
1912 Jasper Fisher assumes presidency; first sales offices are established.
1937 Serial number 500,000 assigned to a Type 1 pump governor on Nov. 5.
1938 Jasper Fisher dies.
1940 First Western Union teletype machine is installed to speed communication.
1943 One millionth serial number assigned June 9.
1944 Mrs. J.H. Fisher is elected president.
1946 Sales department holds first school for field representatives.
1950 Two-millionth controller made. Fisher enters licensee agreement with Elliott Automation to manufacture products for England and Europe.
1954 Mrs. J.H. Fisher retires; J.W. (Bill) Fisher is elected president.
1955 New office building opens in Marshalltown.
1960 Ball valves are added to Fisher's product line. Licensing agreement reached to manufacture in Japan.
1965 Gas regulator department moves to McKinney, Texas.
1967 Governor Road facility, the most advanced machine shop of its kind in the world, begins operation in Marshalltown.
1969 Fisher begins manufacturing electronic instrumentation. Bill Fisher remains as Chairman of the Board until 1974.
1970 Our first European facility opens at Cornwall, England, to manufacture electronic instrumentation.
1972 The R.A. Engel Technical Center, Marshalltown, is completed, housing the world's most advanced flow test laboratory.
1975 A new electronics manufacturing facility is opened in Marshalltown.
1976 Production of our new line of rotary valves begins in Sherman, Texas. Fisher Brazil opens its doors.
1979 Fisher Controls Corporation of Delaware forms a stronger manufacturing, sales and service organization.
1980 Fisher celebrates a Century of Control.
1992 ISO 9001 original registration validated, McKinney, Texas

The Emerson Years

1993 Fisher Controls and Rosemount, merge under ownership of Emerson Electric.
1994 Francel™, Gallardon, France, acquired, expanding manufacturing and distribution in Europe, Middle East and Africa.
1996 Type 299 pilot-operated regulator introduced to natural gas market.
1997 The 50th anniversary of the Type 99. The FloBoss™ 503 and Regulator Vault are introduced.
1998 Fisher Regulators FROMEX manufacturing plant opens in Nuevo Laredo, Mexico.
1999 Revolutionary Type EZR pressure regulator introduced.
2001 Tartarini™, Bologna, Italy, acquired, extending Fisher's brand and distribution capability in Europe and Asia.
2003 Manufacturing capability expanded with opening of Shanghai Plant.
2003 New, state-of-the-art flow test laboratory opens in McKinney, Texas.
2004 Introduced digitally controlled odorant injection system.
2004 Jeon, Chengdu, China, acquired, expanding Fisher's presence in China's low-pressure regulator market.
2005 Fisher celebrates its 125th anniversary.
2005 EZ Family product lines, Types EZR, EZH and EZL pressure regulators expanded.
2005 Customer Center opened to display new regulator technology and train customers and sales channel.
2005 Tescom™ Corporation, Elk River, Minnesota and Selmsdorf, Germany, manufacturer of high-pressure, high-purity pressure regulators, acquired.
2006 Type SR stainless steel Sanitary Regulator introduced.
2007 Commercial Service Regulators platform introduced featuring True Monitor™ Protection, Slam-Shut and Secondary Seat™ Protection options.
2007 Cluj, Romania, manufacturing location online.
2008 Regulator Division becomes Emerson Process Management Regulator Technologies, Inc.
2013 Enardo™, Tulsa, Oklahoma, acquired, expands Fisher's storage tank solutions for oil and gas, petrochemical and chemical industries.
2014 New Global Regulator Techologies Headquarters opens in McKinney, Texas.
2015 Type CS804 regulator with integral slam-shut is added to CS800 Series.
2015 New product launches for MR95 and MR98 Series.
2015 Emerson celebrates its 125th year anniversary.
2017 Acquisition of Pentair's valves and controls business positions Emerson as a main valve partner to its customers.
2019 Emerson acquires Spence and Nicholson Steam Technology product lines from Circor International.

EMERSON

You Demand High Performance.

We Ensure It.



Real-World Simulation

Flow Testing

- Simulates real-world operating conditions using pipelines up to NPS 32 / DN 800 with compressible and incompressible fluids up to 30,000 psig / 2068 bar
- Ensures product performance, efficiency, environmental compliance, life span and safety

Materials Testing

- Develops and tests materials to improve regulator performance and reliability
- Ensures materials meet customer requirements, national standards, and our own, still higher, brandstandards
- Analyzes and troubleshoots field installations for contamination and composition at an elemental level

Environmental Testing

- Simulates real-world operating conditions from the deserts of the Middle East to the Arctic North
- Validates product lifecycles at field conditions to extend service life
- Verifies product corrosion resistance using extended salt-spray exposure to ensure environmental protection of process equipment

You demand products to withstand your toughest conditions, while delivering continued optimal performance, efficiency, reliability and safety.

Our design, test and evaluation technologies and techniques validate a full range of product offerings in each of these critical areas, providing flow, material and environmental testing under real-world operating conditions before you place them in your application.

With more than 130 years of application experience in the process industry, our reputation for solving challenging problems and developing products to specifications exceeding regulatory guidelines. Count on Emerson worldwide to deliver the highest quality products available to your site.

EMERSON

Table of Contents

REGULATOR APPLICATION MAP 2

VALVE APPLICATION MAP 4

REGULATOR SELECTION GUIDE 9

VALVE SELECTION GUIDE 14

ACCESSORIES SELECTION GUIDE 19

REGULATORS

TWO-STAGE SYSTEMS 24

FIRST-STAGE REGULATORS 25
Types R122H, R222H and R622H

SECOND-STAGE REGULATORS 26
Types HSRL, R222, R622, R642 and R652

Two–psi SERVICE REGULATORS 27
Types R622E and R652E

INTEGRAL TWO-STAGE REGULATORS 28
Types R232A and R632A

INTEGRAL TWO-PSI REGULATORS 29
Types R232E and R632E

COMMERCIAL/INDUSTRIAL
HIGH-PRESSURE REGULATORS 30
Types 67CW, 67CH, 67CD, 67CN, 64, 64SR, 627, 630, 99 and 1098-EGR

COMMERCIAL LOW-PRESSURE REGULATORS 36
Types CS200, CS400, CS800, 133L, 133H, 299H and 99L

COMMERCIAL SERVICE OVERPRESSURE PROTECTION 38
Types CS403, CS404 and CS803

AUTOMATIC CHANGEOVER REGULATORS 41
Types 64SR, 749B, 803 and R130

MONITOR OVERPRESSURE PROTECTION 42
Types 627M, 99M and 1098

BACKPRESSURE REGULATORS/RELIEF VALVES 43
Types MR98H, 289H, 1805 and 1808

REGULATOR ACCESSORIES 44

VALVES

INTERNAL VALVES 46
Types C404-32, C407-10, C471, C477, C483, C484 and C486
Types C804-32, C807-10, C871, C877, C883, C884, C897 and C891

INTERNAL VALVE ACCESSORIES 59
P600 Series Brake Chamber Actuators
P700 Series Rotary Actuators

EMERGENCY SHUTOFF VALVES 61
Types N551, N563 and N564
Types N851, N863 and N864

EXCESS FLOW VALVES 67
Types F100, F130, F170, F190 and F202

RELIEF VALVES 68
Types H110, H120, H123, H124, H125, H144, H148, H150, H173, H174, H185, H284, H722, H733, H5114 and 63EGLP Series

GLOBE AND ANGLE VALVES 75
Types N301, N310, N310F, N350, N401, N410, N410F and N450
N600 and N700 Series
Types N801, N810, N810F, N901, N910 and N910F

BACK CHECK VALVES 76
Types G100, G101, G102, G104, G105, G106, G107, G109, G112, G200 and G201

HOSE END, FILLER AND LIQUID TRANSFER VALVES 77
Types D138, D139, D140, D141, M455, N456, N480 and N481

BYPASS AND BACKPRESSURE VALVES 78
Types N100, N110 and N120

LIQUID LEVEL INDICATORS 80
Types J-31, J402S, J403S, J415, J415-1 and J700

COUPLINGS AND ADAPTORS 81
M Series, Types P174 and P104-24

MISCELLANEOUS EQUIPMENT 84

COMPLIANCE SYSTEMS 86

CONVERSION FACTORS 87

ADDITIONAL PRODUCTS LISTING 88

PILOTS AND REPAIR KITS LISTING 98

EDUCATION AND GUIDANCE 100

INDEX 138

Where applicable, Fisher™ brand products presented in this catalog are listed by Underwriters Laboratories (UL®). Use of these products may provide compliance with standards developed by the National Fire Protection Association's Pamphlets 54 and 58. They may also assist in meeting guidelines established by the Department of Transportation, ASME and other third party agencies. Contact your Fisher brand LPG Regulators and Equipment Distributor for assistance in determining product applications.

NFPA® WLGA Energy Anywhere NPGA NATIONAL PROPANE GAS ASSOCIATION UL® LISTED GASCheck™ Canadian Propane Association | Association canadienne du propane

EMERSON™

Application: Regulators

FISHER

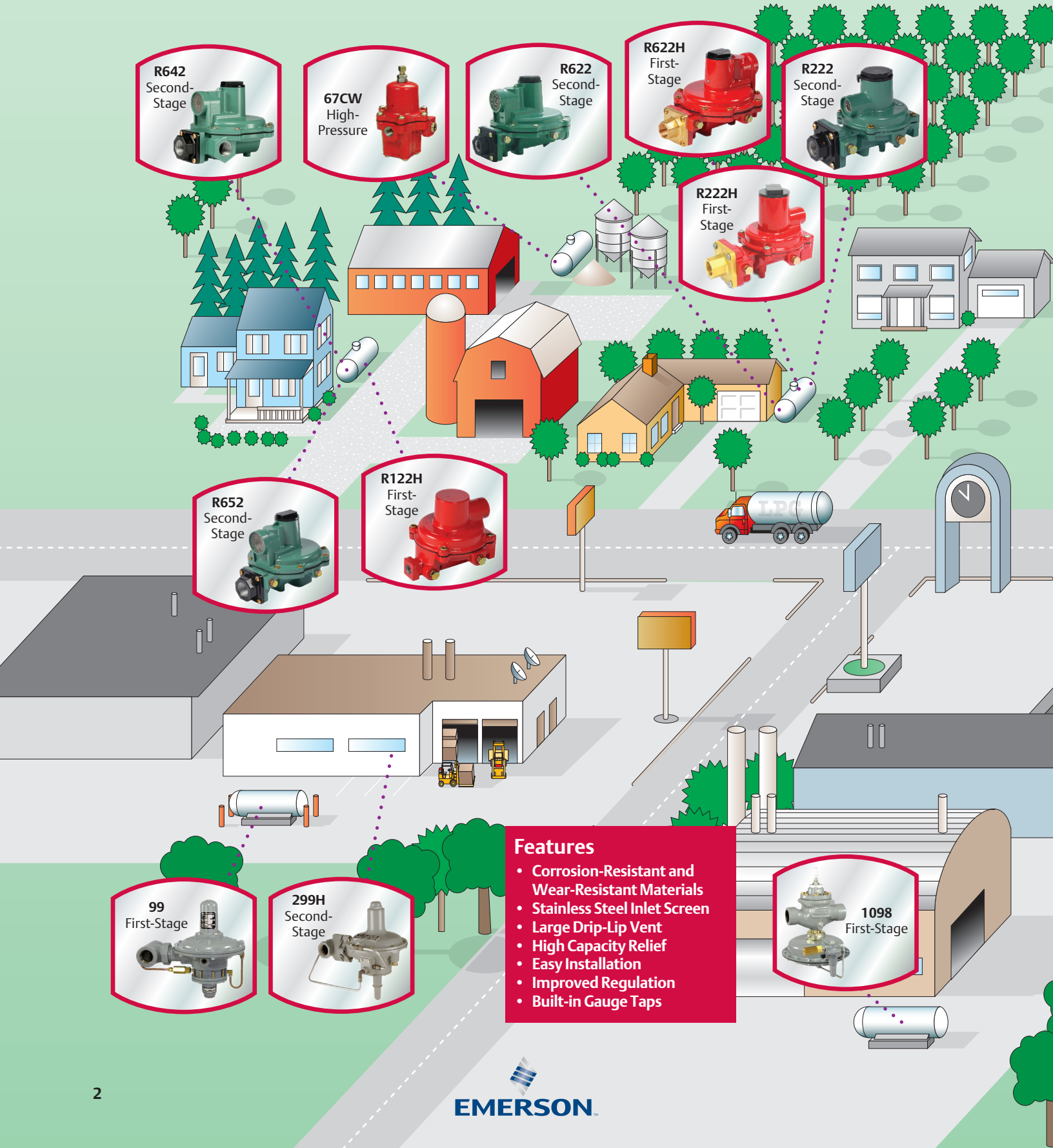

Features

- Corrosion-Resistant and Wear-Resistant Materials
- Stainless Steel Inlet Screen
- Large Drip-Lip Vent
- High Capacity Relief
- Easy Installation
- Improved Regulation
- Built-in Gauge Taps

EMERSON

Introduction

The regulator truly is the heart of an LPG installation. It must compensate for variations in tank pressure from 8 to 250 psig / 0.55 to 17.2 bar and deliver a constant outlet pressure of LPG typically at 11 in. w.c. / 27 mbar to consuming appliances. The regulator must deliver this pressure despite the intermittent use of the appliances.

In propane service, NFPA 58 requires Two-Stage regulation on all fixed piping systems that serve 14 in. w.c. / 35 mbar appliance systems (normally operated at 11 in. w.c. / 27 mbar pressure). Two-Stage regulation produces a nearly constant pressure to the appliance and can result in a more efficient LPG operation for the dealer resulting in less maintenance and fewer installation call-backs.

With properly selected regulators, the internal relief valve provides 2 psig / 0.14 bar overpressure protection as required by NFPA 58.

Emerson is a leading international supplier of cost-effective products, services and solutions used in the propane industry. Around the world, Emerson and its distributors offer quality products as well as applications engineering, education programs and after sales service. For any of the products described in this catalog, contact the Fisher™ LPG Equipment distributor near you.

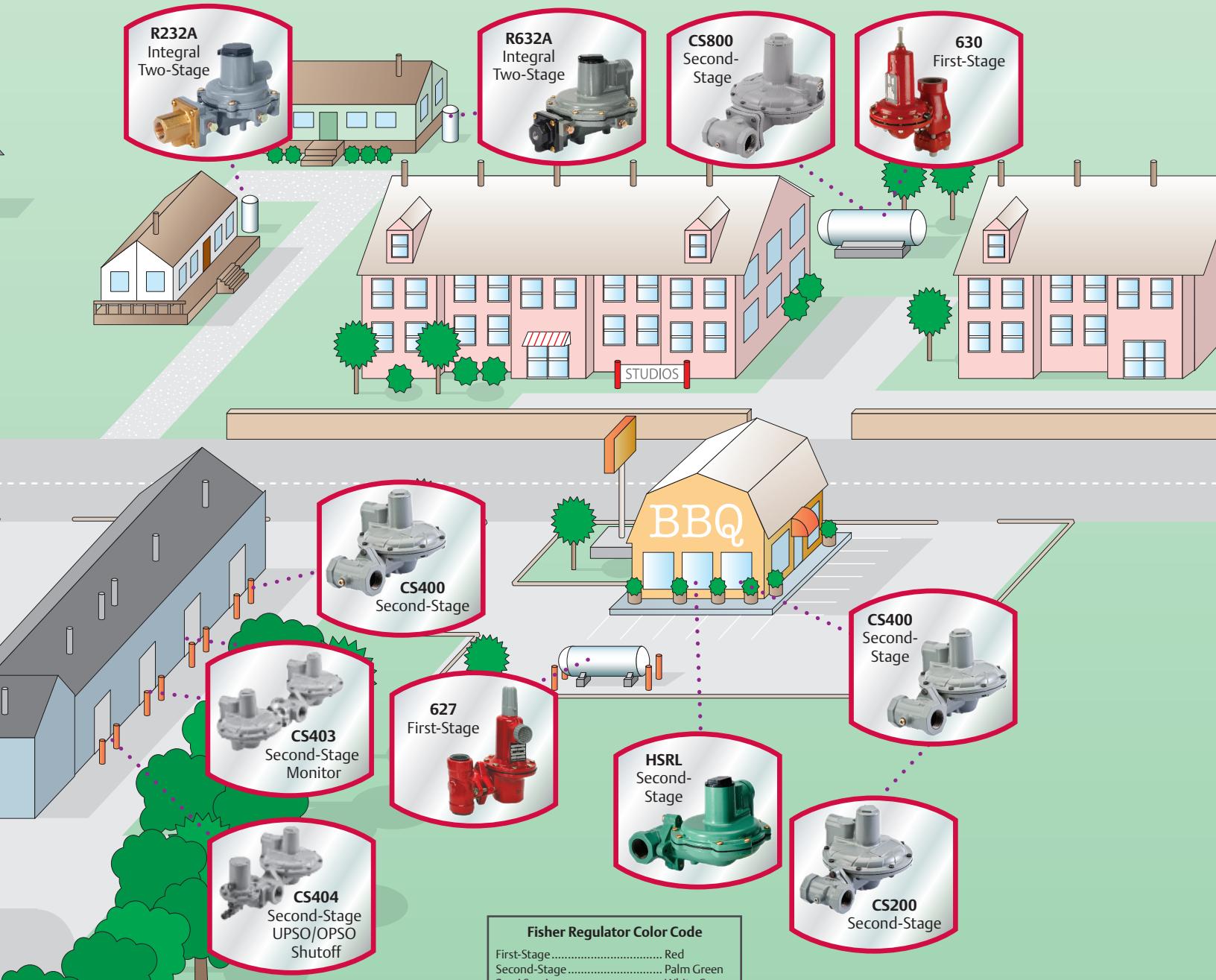

Fisher Regulator Color Code

First-Stage	Red
Second-Stage	Palm Green
2-psi Service	White Cap
Integral Two-Stage	Gray
Pounds to Pounds	Red
Industrial	Black or Gray

EMERSON™

Application: Valves and Relief Valves

FISHER



EMERSON

Introduction

Fisher™ brand internal valves, relief valves, emergency shutoff valves and globe and angle valves are installed in the inlets and outlets (liquid or vapor) of pressure vessels and in piping systems to control the flow of LPG and Anhydrous Ammonia (NH_3). These valves are frequently used on bobtails, transport truck tanks, large stationary storage tanks and in-line installations.

The valves provide a means of withdrawing and filling product with or without pumps and compressors. These valves may be used as primary shutoff valves, excess flow valves and back check valves. No one offers a more complete line of LPG Equipment to match your job specification.

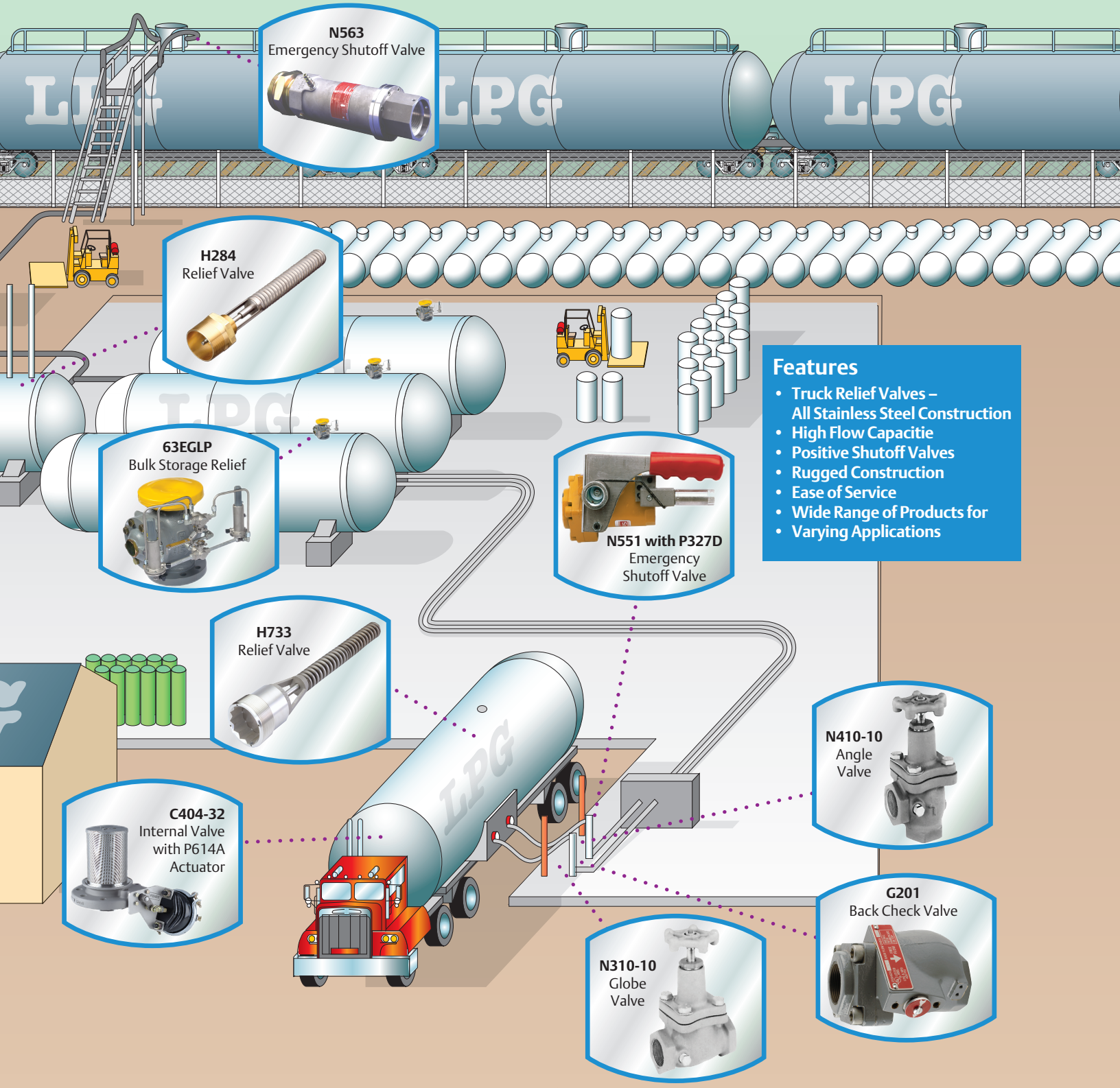

Features

- Truck Relief Valves – All Stainless Steel Construction
- High Flow Capacitie
- Positive Shutoff Valves
- Rugged Construction
- Ease of Service
- Wide Range of Products for
- Varying Applications

EMERSON™

Application: Bobtail Application Map

FISHER

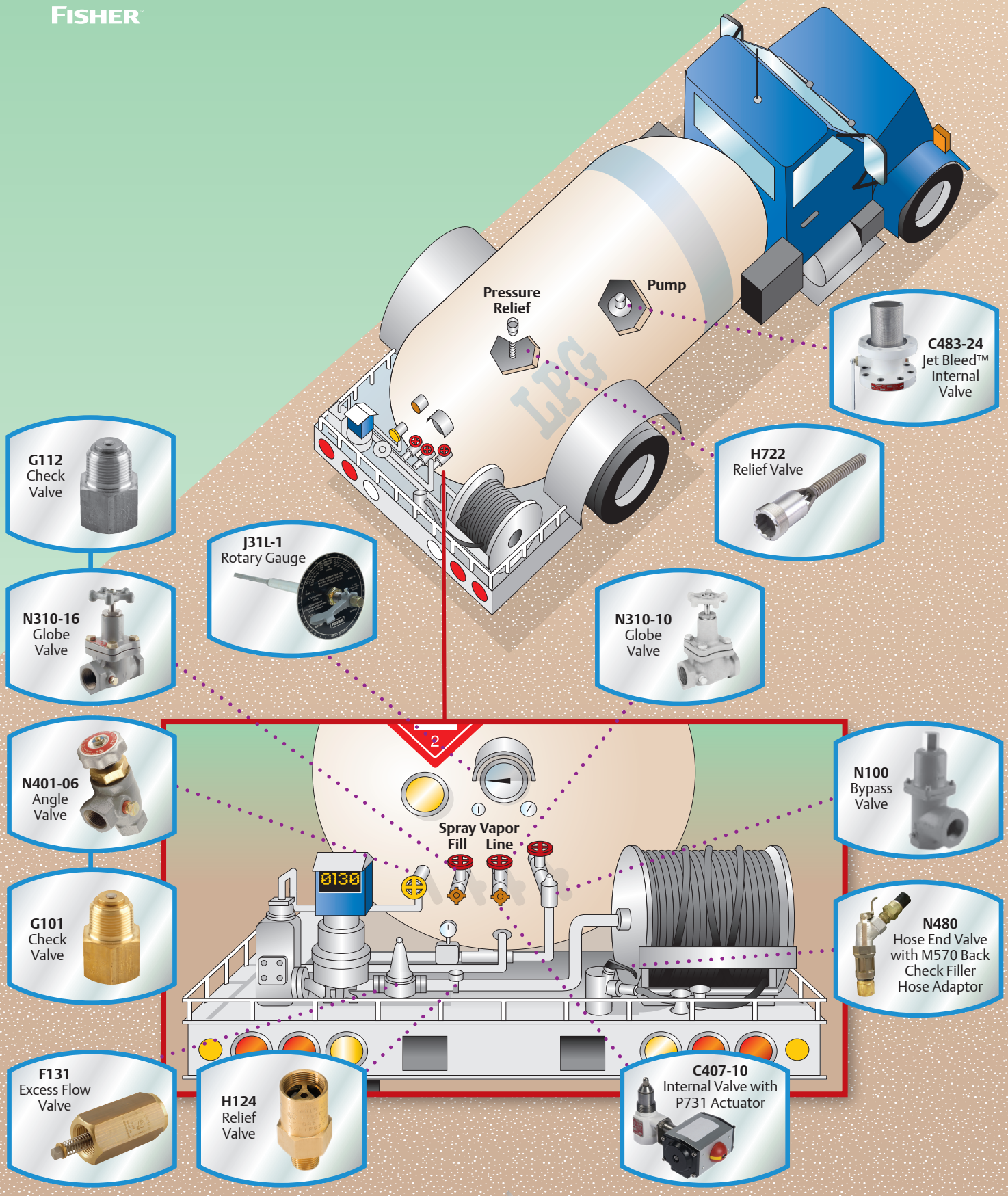

EMERSON

Application: Transport Application Map

FISHER

Features

- Rugged Designs
- All Stainless Steel Construction
- Long Life Sealants
- Ease of Maintenance
- Wide Selection of Products and Accessoties

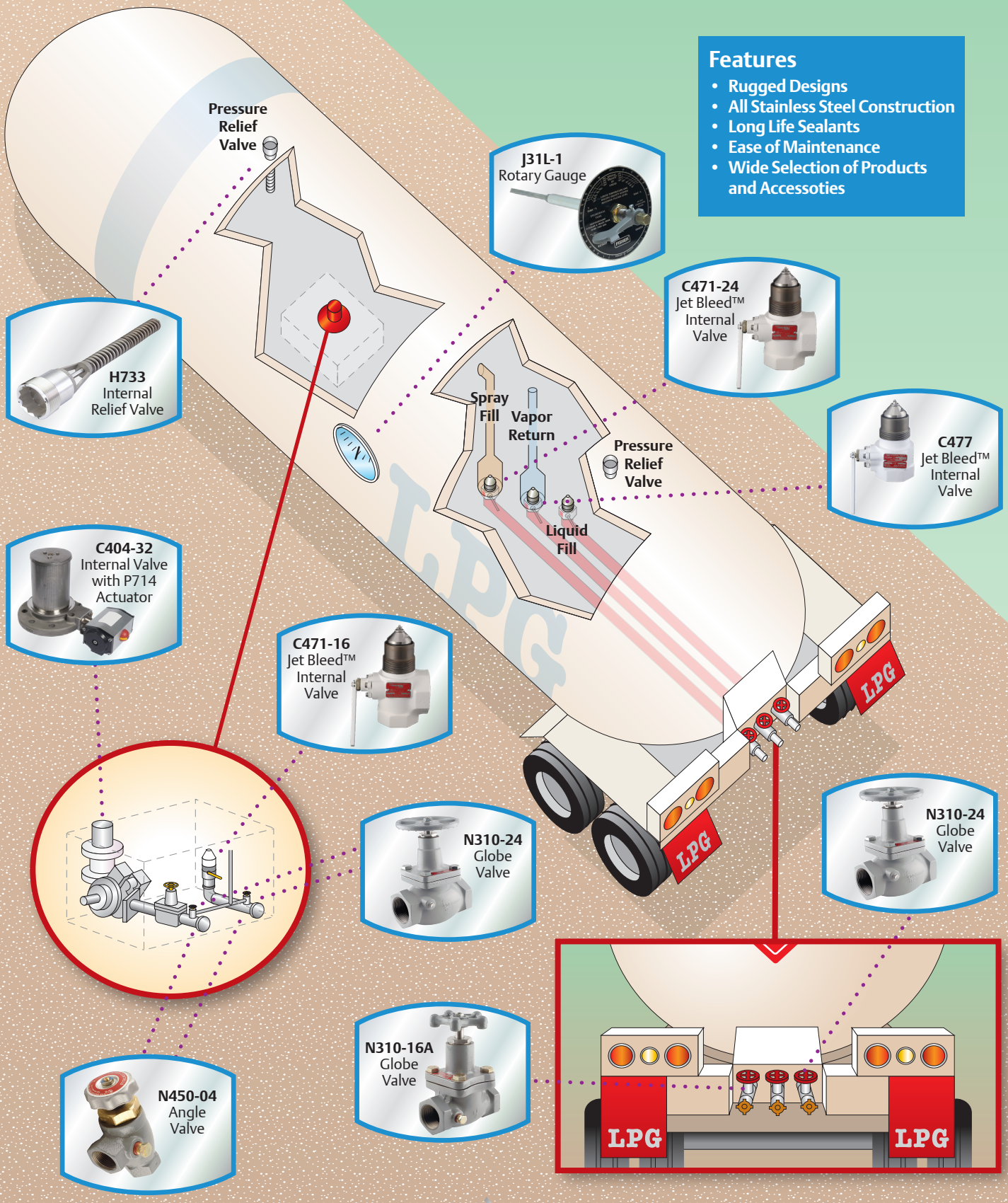

Application: Storage Application Map

FISHER

Features

- High Flow Capacity
- Rugged Designs
- Easy Maintenance
- Wide Selection of Products and Accessoties

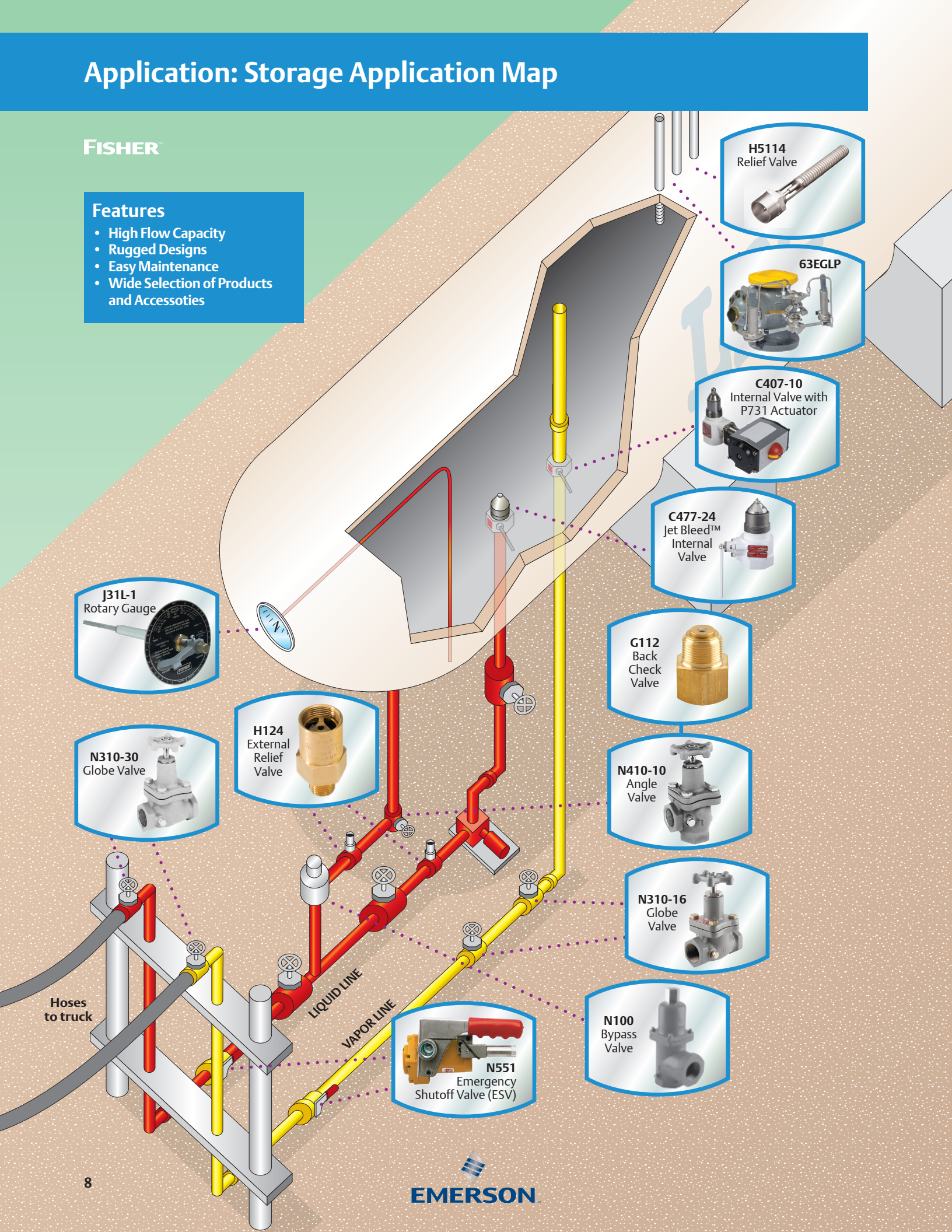

EMERSON

Commercial/Industrial High-Pressure Regulators

Maximum Inlet Pressure	Outlet Pressure Range	Rated Capacity*(1)		Type Number
250 psig / 17.2 bar	3 to 120 psig / 0.21 to 8.3 bar	1.2M BTU per hour / 13.5 SCMH / 23.38 kg/hr		**67C Series** Page 30
250 psig / 17.2 bar	3 to 100 psig / 0.21 to 6.9 bar	5.25M BTU per hour / 59.1 SCMH / 102.27 kg/hr		**64 Series** Page 31
250 psig / 17.2 bar	5 to 40 psig / 0.35 to 2.8 bar	20.95M BTU per hour / 235 SCMH / 408.07 kg/hr		**627 Series** Page 32
250 psig / 17.2 bar	8 to 20 psig / 0.55 to 1.4 bar	14M BTU per hour / 158 SCMH / 272.72 kg/hr		**630 Series** Page 33
300 psig / 20.7 bar	7 in. w.c. to 65 psig / 17 mbar to 4.5 bar	74.3M BTU per hour / 836 SCMH / 1447.71 kg/hr		**99 Series** Page 34
400 psig / 27.6 bar	3 to 100 psig / 0.21 to 6.9 bar	1.2B BTU per hour / 13,481 SCMH / 23,376 kg/hr		**1098 Series** Page 35

*See capacity tables in the following sections for expanded rating information.
1. Based on inlet pressure 20 psig / 1.4 bar greater than outlet with 20% droop, unless otherwise noted.

Commercial/Industrial Low-Pressure Regulators

Maximum Inlet Pressure	Outlet Pressure Range	Rated Capacity*(1)		Type Number
125 psig / 8.6 bar	3.5 in. w.c. to 2 psig / 9 mbar to 0.14 bar	3.9M BTU per hour / 43.8 SCMH / 75.97 kg/hr(3)		**CS200 Series** Page 36
125 psig / 8.6 bar	3.5 in. w.c. to 5.5 psig / 9 mbar to 0.38 bar	8.9M BTU per hour / 100 SCMH / 173.37 kg/hr(2)		**CS400 Series** Page 36
125 psig / 8.6 bar	8 in. w.c to 5.5 psig / 20 mbar to 0.38 bar	20M BTU per hour/ 224 SCMH / 389.6 kg/hr		**CS800 Series** Page 36
60 psig / 4.1 bar	1.5 to 3 psig / 0.10 to 0.21 bar	66.15M BTU per hour / 745 SCMH 1288.6 kg/hr(2)		**Type 133H** Page 40
60 psig / 4.1 bar	8.5 to 18 in. w.c. / 21 to 45 mbar	70.8M BTU per hour / 797 SCMH / 1380.65 kg/hr(3)		**Type 133L** Page 40
150 psig / 10.3 bar	9 in. w.c. to 16 psig / 22 mbar to 1.1 bar	38M BTU per hour / 428 SCMH 740.24 kg/hr		**299H Series** Page 40
150 psig / 10.3 bar	7 in. w.c. to 5 psig / 18 mbar to 0.35 bar	63.25M BTU per hour/ 712 SCMH 1232.11 kg/hr		**99-500P Series** Page 40
250 psig / 17.2 bar	3 in. w.c. to 5 psig / 7 mbar to 0.35 bar	556,000 BTU per hour / 6.2 SCMH / 10.83 kg/hr(4)		**912 Series** Page 44

*See capacity tables in the following sections for expanded rating information.
1. Based on inlet pressure 20 psig / 1.4 bar greater than outlet with 20% droop, unless otherwise noted.
2. Based on 10 psig / 0.69 bar inlet pressure setting and 20% droop.
3. Based on 10 psig / 0.69 bar inlet pressure setting and 2 in. w.c. / 5 mbar droop.
4. Types 912-101 and -104 rating at 30 psig / 2.1 bar inlet.

First-Stage Regulators

Maximum Inlet Pressure	Outlet Pressure Setting/Setpoint	Rated Capacity*(1)		Type Number
250 psig / 17.2 bar	10 psig / 0.69 bar +/- 1 psig / 69 mbar nominal outlet setting (non-adjustable)	1.1M BTU per hour / 12.4 SCMH / 21.43 kg/hr		**R122H Series** Page 25
250 psig / 17.2 bar	5 or 10 psig / 0.35 or 0.69 bar standard setpoints	2.0M BTU per hour / 22.5 SCMH / 38.96 kg/hr		**R222H Series** Page 25
250 psig / 17.2 bar	5 or 10 psig / 0.35 or 0.69 bar standard setpoints	2.4M BTU per hour / 27.0 SCMH / 46.75 kg/hr		**R622H Series** Page 25

Second-Stage Regulators(3)

Maximum Inlet Pressure	Outlet Pressure Range	Rated Capacity*(2)		Type Number
10 psig / 0.69 bar	9 to 13 in. w.c. / 22 to 32 mbar	2.6M BTU per hour / 29.3 SCMH / 50.65 kg/hr		**Type HSRL** Page 26
10 psig / 0.69 bar	11 in. w.c. / 27 mbar	650,000 BTU per hour / 7.3 SCMH / 12.66 kg/hr		**R222 Series** Page 26
10 psig / 0.69 bar	11 in. w.c. / 27 mbar	1.4M BTU per hour / 15.8 SCMH / 27.27 kg/hr		**R622 Series** Page 26
10 psig / 0.69 bar	11 in. w.c. / 27 mbar	920,000 BTU per hour / 10.4 SCMH / 17.92 kg/hr		**R642 Series** Page 26
10 psig / 0.69 bar	11 in. w.c. / 27 mbar	1M BTU per hour / 11.2 SCMH / 19.48 kg/hr		**R652 Series** Page 26

*See capacity tables in the following sections for expanded rating information.
1. Based on 30 psig / 2.1 bar inlet pressure and 20% droop.
2. Based on 10 psig / 0.69 bar inlet pressure setting.
3. Second-Stage regulators are UL® rated.

2-psi Service Regulators

Maximum Inlet Pressure	Standard Setpoint	Rated Capacity*(1)		Type Number
10 psig / 0.69 bar	2 psi / 0.14 bar	1.68M BTU per hour / 18.9 SCMH / 32.73 kg/hr		**R622E Series** Page 27
10 psig / 0.69 bar	2 psi / 0.14 bar	1.5M BTU per hour / 16.9 SCMH / 29.22 kg/hr		**R652E Series** Page 27

Integral Two-Stage Regulators

Maximum Inlet Pressure	Standard Setpoint	Rated Capacity*(1)		Type Number
250 psig / 17.2 bar	**First-Stage:** Approximately 10 psig / 0.69 bar (non-adjustable) **Second-Stage:** 11 in. w.c. / 27 mbar	550,000 BTU per hour / 6.2 SCMH / 10.71 kg/hr		**R232A Series** Page 28
250 psig / 17.2 bar	**First-Stage:** Approximately 10 psig / 0.69 bar (non-adjustable) **Second-Stage:** 11 in. w.c. / 27 mbar	950,000 BTU per hour / 10.7 SCMH / 18.51 kg/hr		**R632A Series** Page 28

*See capacity tables in the following sections for expanded rating information.
1. Based on 10 psig / 0.69 bar inlet pressure setting and 20% droop.
2. Based on 30 psig / 2.1 bar inlet pressure setting and 2 in. w.c. / 5 mbar droop.

Integral Two-psig Regulators

Maximum Inlet Pressure	Standard Setpoint	Rated Capacity*(1)		Type Number
250 psig / 17.2 bar	**First-Stage:** Approximately 10 psig / 0.69 bar (non-adjustable) **Second-Stage:** 2 psi / 0.14 bar	500,000 BTU per hour / 5.6 SCMH / 9.74 kg/hr		**R232E Series** Page 29
250 psig / 17.2 bar	**First-Stage:** Approximately 10 psig / 0.69 bar (non-adjustable) **Second-Stage:** 2 psi / 0.14 bar	900,000 BTU per hour / 10.1 SCMH / 17.53 kg/hr		**R632E Series** Page 29

Backpressure Regulators/Relief Valves

Maximum Working Pressure	Relief Pressure Setting	Rated Capacity*		Type Number
300 psig / 20.7 bar	100 psig / 6.9 bar	93.1 GPM / 352 l/min Propane		**Type MR98H** Page 43
25 psig / 1.7 bar	15 psig / 1.0 bar	20,000 SCFH / 566 SCMH Propane		**Type 289H** Page 43
150 psig / 10.3 bar	30 psig / 2.1 bar	12,000 SCFH / 340 SCMH Propane		**Type 1805** Page 43

*See capacity tables in the following sections for expanded rating information.
1. Based on 30 psig / 2.1 bar inlet pressure setting and 20% droop.

Valves and Relief Valves
Quick Selection Guide

FISHER

Internal/External Relief Valves

Maximum Inlet Pressure (Body Rating)	Standard Setpoint	Capacity*		Type Number
480 psig / 33.1 bar	85 to 375 psig / 5.9 to 26 bar	Up to 47,164 SCFM / 84,170 SCMH		**Type 63EGLP** Page 70
480 psig / 33.1 bar	125 to 312 psig / 8.6 to 21.5 bar	**UL®:** Up to 11,635 SCFM / 20,764 SCMH Air **ASME:** Up to 15,286 SCFM / 18,097 SCMH Air		**H284 and H5114 Series** Page 69
480 psig / 33.1 bar	125 to 312 psig / 8.6 to 21.5 bar	**UL:** Up to 11,315 SCFM / 19,940 SCMH Air **ASME:** Up to 13,876 SCFM / 16,400 SCMH Air		**H722 and H733 Series** Page 68
420 psig / 29.0 bar	35 to 350 psig / 2.4 to 23.8 bar Fixed Setting	Up to 2456 SCFM / 4173 SCMH		**H100 Series** Page 74

Bypass and Backpressure Valves

Maximum Working Pressure	Relief Pressure Range	Body Size and End Connection Style		Type Number
400 psig / 27.6 bar	10 to 150 psig / 0.69 to 10.3 bar	3/4 to 2 in. FNPT		**N100 Series** Page 80

*See capacity tables in the following sections for expanded rating information.

EMERSON

Internal Valves

Pressure Rating	Excess Flow Spring	Capacity*		Type Number
400 psig / 27.6 bar WOG	30 to 80 GPM / 113 to 302 l/min	19,200 SCFH / 544 SCMH Propane		**C407-10 Series** Page 47
400 psig / 27.6 bar WOG	60 to 460 GPM / 227 to 1741 l/min	178,000 SCFH / 5040 SCMH Propane		**C471-16, -24 Jet Bleed Internal™ Series** Page 47
400 psig / 27.6 bar WOG	100 to 460 GPM / 379 to 1741 l/min	178,000 SCFH / 5040 SCMH Propane		**C477-16, -24 and C486-24 Jet Bleed Internal™ Series** Page 47
400 psig / 27.6 bar WOG	160 to 400 GPM / 606 to 1514 l/min	190,000 SCFH / 5380 SCMH Propane		**C483-24 Jet Bleed Internal™ Series** Page 53
400 psig / 27.6 bar WOG	160 to 400 GPM / 606 to 1514 l/min	190,000 SCFH / 5380 SCMH Propane	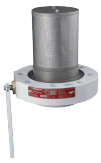	**C484-24 Jet Bleed Internal™ Series** Page 53
400 psig / 27.6 bar WOG	340 to 1000 GPM / 1287 to 3785 l/min	356,200 SCFH / 10,088 SCMH		**Type C404-32** Page 55

*See capacity tables in the following sections for expanded rating information.

Valves and Relief Valves
Quick Selection Guide

FISHER

Back Check Valves

Seat Construction	Pressure Rating	Capacity*		Type Number
Soft Seat and Metal Seat	250 psi / 17.2 bar	254 GPM / 961 l/min Propane		**G100 Series** Page 78
Soft Seat	400 psig / 27.6 bar WOG	Up to 1620 GPM / 6132 l/min Propane		**G200 Series** Page 78

Emergency Shutoff Valves

Body Size and End Connection Style	Maximum Inlet Pressure	Capacity*		Type Number
1-1/4, 2 or 3 in. FNPT	400 psig / 27.6 bar	Up to 850 GPM / 3127 l/min Propane	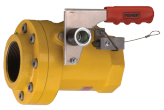	**N551 Series** Page 61
2 in. FNPT	400 psig / 27.6 bar	413 GPM / 1563 l/min Propane	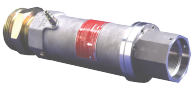	**N563 Series** Page 65
2 in. FNPT	400 psig / 27.6 bar	200 GPM / 757 l/min Propane	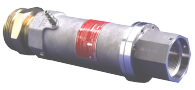	**N564 Series** Page 65

*See capacity tables in the following sections for expanded rating information.

EMERSON

Globe and Angle Valves

Selection Description	Maximum Operating Pressure	Body Size and End Connection Style		Type Number
Globe Valve (Heavy Duty Version)	400 psig / 27.6 bar	1/2 to 3 in. FNPT; NPS 3 / DN 80 CL 300 Flange		**N301, N310 Series** Page 75
Globe Valve (Economy Duty Version)	400 psig / 27.6 bar	1/2 to 3/4 in. FNPT		**N350 Series** Page 75
Angle Valve (Heavy Duty Version)	400 psig / 27.6 bar	1/2 to 3 in. FNPT; NPS 3 / DN 80 CL 300 Flange		**N401, N410 Series** Page 75
Angle Valve (Economy Version)	400 psig / 27.6 bar	1/2 to 3/4 in. FNPT		**N450 Series** Page 75

*See capacity tables in the following sections for expanded rating information.

Valves and Relief Valves
Quick Selection Guide

FISHER

Valves

Product/Function	Selection Information		Type Number
Excess Flow Valve	Brass or Steel body in a variety of Inlet and Outlet Connection Sizes and Styles; Up to 10.7 psi / 0.74 bar differential pressure		**F Series** Page 67
Filler Valve	2 in. MNPT x 2-1/4 in. ACME or 3 in. MNPT x 3-1/4 in. ACME; Single or Double Back Check style; 275 GPM / 1041 l/min filling capacity		**D Series** Page 79
Hose End Valve	1-3/4 in. ACME x 1 in. NPT; Ductile iron body		**Type N480** Page 79
Liquid Transfer Valve	3/4 MNPT x 1-3/4 in. Male ACME		**N456 Series** Page 79
Cylinder Filling Valve	30 psig / 2.1 bar Recommended Supply Pressure; Aluminum Body		**Type N201** Page 87

*See capacity tables in the following sections for expanded rating information.

EMERSON

Regulator Accessories

Product/Function	Selection Information		Type Number
Screened Vents for Regulator	1/4 in. FNPT to 1 in. MNPT		**Y602 Series** Page 44
Regulator Mounting Brackets	Triangular, Bowtie or Strap Design		**Type P100** Page 45
Test Pressure Gauge for Appliance Line Pressure	1/4 in. NPT or Female Hose		**50 Series** Page 45
Pressure Gauge	1/4 in. MNPT; 0 to 400 psi / 0 to 27.6 bar; Ranges in MPa, kg/cm2, bar		**J500 Series** Page 45
Adjustable Orifice Reamer	Drill Size No. 80 through No. 50		**Type P520L** Page 87

Bulk Storage Tank and Valve Accessories

Product/Function	Selection Information		Type Number
Rotary Level Gauge for Stational or Mobile Tank	68 to 140 in. / 1727 to 3556 mm Lengths		**Type J-31** Page 82
Liquid Level Vent Valves	3/4 in. MNPT for FNPT Connection; with or without Pressure Gauge		**J400 Series** Page 82
Container (Tank) Thermometer	1/2 in. MNPT; -40 to 120°F / -40 to 49°C		**J700 Series** Page 82
Female Acme Filler Couplings	1-3/4 in. Female Acme by 1/2 in. MNPT through 4-1/4 in. Female Acme by 3 in. MNPT		**Type M631** Page 83
Female Acme Vapor Return Couplings	1-3/4 in. Female Acme by 3/4 in. MNPT through 2-1/4 in. Female Acme by 1-1/4 in. MNPT		**Types M151, M160** Page 83
O-ring for Male Adaptors	For 2-1/4 or 3-1/4 in. Adaptors to Give a Better Seal than Washers		**T12655T0012 / 1H291706562** Page 83
Adaptor Caps	2-1/4 through 4-1/4 in. Female Acme by 1-3/4 through 3-1/4 in. Male Acme		**Type M611** Page 83
POL Filler Coupling	Soft-Nose Male POL by 1/4 in. MNPT		**Type M390** Page 83
Filler Valve Adaptor	For Filler Valves with 1-3/4 in. Male Acme Filler Connection and a 3/4 in. FNPT Outlet		**Type M450A** Page 84

Bulk Storage Tank and Valve Accessories

Product/Function	Selection Information		Type Number
Swivel POL Adaptor with Metal Seats	Straight or Angle Male POL by 1/4 in. MNPT		Type M318
Auxiliary Remote Cable Release for Internal Valves	With 25 or 50-Feet / 7.6 or 15.2 m Cable or without Cable		Type P163A Page 59
Handle- or Cable-Operated Latch/ Remote Release for Internal Valves	Built-In Fusible Link to Close Valve in Case of Fire	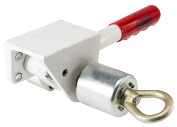	Type P313 Page 59
Primary Cable Control for Internal Valves	4, 5 or 6 in. / 102, 137 or 152 mm Travel		Type P650 Page 59
Cable Control, Release Mechanism and Cable Assembly for Internal Valves	For 1-1/4, 2, 3 and 4 in. / DN 32, 50, 80 and 100 Internal Valves		Type P314 Page 59
Relief Valve Pipeaway Adaptors for DOT	For Use with Types H284, H5114, H125, H150, H148 and H173 Valves		Types P104-24, P174 Page 69, 74
Filler Hose Adaptor with Back Check Valve	1-3/4 in. Female Acme by 1-3/4 in. Male Acme		Type M570 Page 84

Bulk Storage Tank and Valve Accessories

Product/Function	Selection Information		Type Number
Pneumatic Actuator	For Use with C407-10 Series Only		**Types P389 and P731** Page 60
Pneumatic Actuator	For Type C484-24 Jet Bleed Internal™ Valve		**Types P613 and P713** Page 60
Pneumatic Actuator	For Type C483-24 Jet Bleed Internal™ Valve		**Types P623 and P723** Page 60
Pneumatic Actuator	For Types C471 and C477 Jet Bleed Internal™ Valves (2 and 3 in. NPT Sizes)		**Types P639 and P739** Page 60
Pneumatic Actuator	For Type C404-32 4 in. / DN 100 Single Flanged Valve		**Types P614A and P714** Page 60
Pneumatic Actuator	For Closing and Opening of N551 Series Snappy Joe™ Emergency Shutoff Valves (ESVs)		**Type P539A** Page 61

Bulk Storage Tank and Valve Accessories

Product/Function	Selection Information		Type Number
Fuse Plug	208 to 220°F / 98 to 104°C Melting Temperature, Available in 1/8 and 1/4 in. MNPT Sizes		T1140399982 / T1033699982 Page 60
Protective Caps for Relief Valves	For Types H110 through H174 Valves		Type P206 Page 74
Seals and Plugs for Female Acme Threads	1-1/4 to 4-1/4 in. Male Acme		Types M178, M535-34 Page 84
Female Acme Caps	Hand or Wrench Installation		Type M108 Page 85
Clamp Hose Couplings	Swivel or Standard: 1/2 in. MNPT through 4-1/4 in. Female Acme for 1/2 through 3 in. Hose		Type M3162 Page 86
Spanner Wrench for Large Female Acme Caps and Couplings	For Use with 2-1/4 through 4-1/4 in. Acme Threads		Types P120B Page 87
Ring and Chain Assemblies	For 1-1/4 through 4-1/4 in. Acme Caps or Dust Seals		Type P147, P167 and P183 Page 86

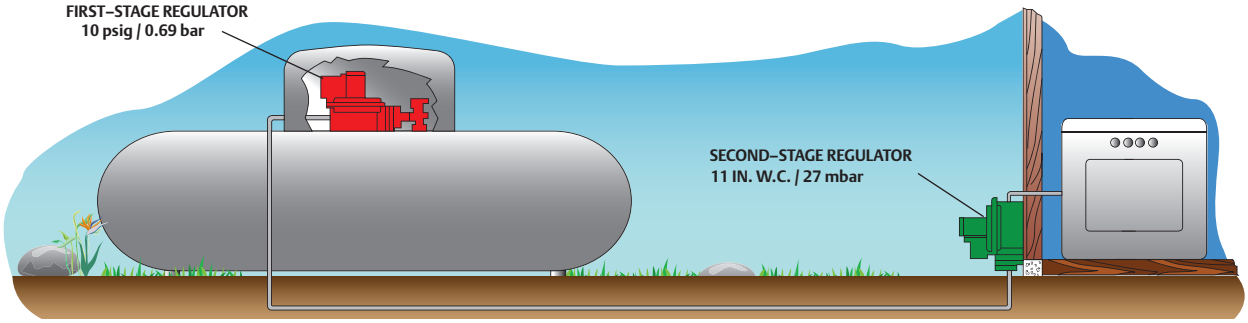

Figure 1. *Two-Stage Regulation, One at Tank and One at Building, Reduce Pressure Down to Burner Pressure (11 in. w.c. / 27 mbar)*

Two-Stage Systems

Fisher™ regulators makes the LPG industry's largest variety of First and Second-Stage regulators for domestic and commercial/industrial applications.

A Two-Stage system (Figure 1) uses two regulators to cut the supply pressure from the storage tank to the appliance. The Two-Stage system supplies a constant outlet pressure to the appliance. With more uniform pressure, appliances work better. Single-Stage regulators should be replaced with Two-Stage or Integral Two-Stage systems to comply with code requirements such as NFPA 58.

With a Two-Stage system, a First-Stage regulator supplies a nearly constant inlet pressure around 8 to 10 psig / 0.55 to 0.69 bar to a Second-Stage regulator. This means the Second-Stage unit does not have to attempt to compensate for widely varying inlet pressures. Second-Stage pressure can be adjusted at the building as desired.

First-Stage Regulators

First-Stage regulators reduce tank pressure to a lower pressure (usually 10 psig / 0.69 bar) for a Second-Stage regulator. Fisher First-Stage regulators are painted red for easy identification. Vents are screened with standard orientation over the outlet.

Two-psi Service Regulators

Two-psi Service regulators serve as an intermediate regulator after the First-Stage regulator. These regulators are designed for 2 psig / 0.14 bar LPG regulator systems. Fisher 2-psi regulators are painted white or are green with white closing caps for easy identification.

Second-Stage Regulators

Second-Stage regulators reduce the pressure from a First-Stage unit to 11 in. w.c. / 27 mbar in domestic installations. Vents are screened with standard orientation over the inlet; however, other vent orientations are available. Fisher Second-Stage regulators are normally painted palm green for easy identification.

Integral Two-Stage Regulators

Integral Two-Stage units combine a First-Stage regulator and Second-Stage regulator into one compact unit and are recommended for installations where piping distance between the building being served and the tank is short. Integral Two-Stage regulators provide all the advantages of Two-Stage regulation. These units are color coded gray for easy identification. Vents are screened with standard orientation over the outlet.

Five Reasons to Two-Stage

1. **Compliance with Code Requirements such as NFPA 58**

2. **Fewer Trouble Calls**

With a Two-Stage system, one can expect fewer customer trouble calls due to regulator freeze-ups from too much water in the gas. A Two-Stage regulator reduces these possibilities in two ways:
a) a larger orifice can be used, making it more difficult for ice to build up and block the orifice, and
b) more heat can be transferred through the walls of two regulators than one

3. **Smaller Pipe or Tubing**

Due to the higher pressure between the First and Second-Stage units, smaller pipe or tubing can be used on a Two-Stage system. These savings can make a Two-Stage system more economical to install than a Single-Stage.

4. **Constant Appliance Pressure**

With a Two-Stage system, a First-Stage regulator supplies a nearly constant inlet pressure of 8 to 10 psig / 0.55 bar to 0.69 bar to a Second-Stage regulator. This means that the Second-Stage regulator does not have to attempt to compensate for widely varying inlet pressures. With more uniform pressure, appliances work better and customers are less likely to experience problems that result in service calls.

5. **Keep Downstream Pressure Below 2 psig / 0.14 bar**

Second-Stage and Integral Two-Stage regulators have internal pressure relief valves, which limit the outlet pressure to 2 psig / 0.14 bar when the seat disc is removed and the inlet pressure is 10 psig / 0.69 bar or less as specified in *UL® 144, STANDARD FOR LPG REGULATORS.*

When to Two-Stage

Two-Stage systems whenever the following conditions exist:

1. Compliance with regulation codes.
2. There is a possibility of moisture in the LPG.
3. Wide fluctuations in gas demand exist.
4. Winter and summer temperatures vary greatly.

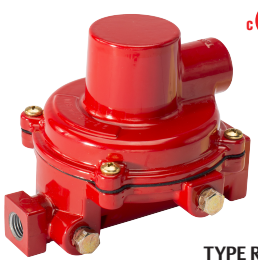

TYPE R122H

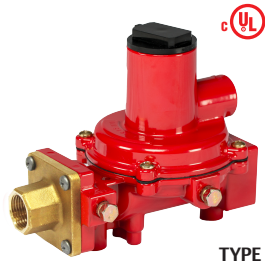

TYPE R222H

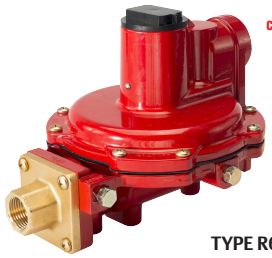

TYPE R622H

Types R122H, R222H and R622H First-Stage Regulators are Underwriters Laboratories (UL®) listed regulators designed for Two-Stage LPG systems. These First-Stage regulators reduce tank pressure to a lower pressure (usually 10 psig / 0.69 bar) for a Second-Stage regulator. Maximum allowable inlet pressure is 250 psig / 17.2 bar. Fisher™ First-Stage regulators are painted red for easy identification. Vents are screened with standard orientation over the outlet. The Types R122H, R222H and R622H regulators have a temperature rating of -20 to 160°F / -29 to 71°C, but have passed Fisher internal testing for lockup, relief start-to-discharge and reseal down to -40°F / -40°C. The design's superior relief performance exceeds UL requirements and provides double failure overpressure protection (pressure downstream of the second regulator will be limited close to 2 psig / 0.14 bar, even if both regulators are damaged) when used with R600 Series Second-Stage regulator. Corrosion and wear resistant materials and stainless steel internal parts provide a recommended replacement life of 20 years. A large fabric reinforced diaphragm with molded lips provide precise regulation. The large precision machined orifice assists in minimizing freeze problems. 1/8 in. inlet and outlet gauge taps allow easy system testing. Large inlet and outlet wrench flats for easy installation. The unit's Fluorocarbon (FKM) valve disc provides better lockup performance and durability in contaminated gas. The vent is with 3/8 in. NPT for easy installation of vent piping.

Type R122H – Designed for use in domestic applications, the Type R122H's size makes it perfect for tight installations. Its non-adjustable setpoint makes the unit virtually tamper proof. The outlet pressure setpoint remains at a nominal factory setting of 10 psig / 0.69 bar.

Type R222H – First stage regulator with all Type R622H benefits stated above, but with a compact profile. 65% greater flow than typical compact regulators but with a 40% smaller footprint. It is perfect for underground tanks or limited dome spaces.

Type R622H – High Flow First-Stage regulator with multiple end connections and adjustable outlet pressure spring ranges. A large 3/4 in. FNPT drip-lip vent reduces the chance of blockage by freezing rain or sleet when properly installed with the vent pointing down. Each Type R622H is equipped with a corrosion-resistant internal relief valve that provides high capacity relief and a travel stop on the closing cap. Its size and configuration make it ideal for under-the-dome installations.

First-Stage Regulators

TYPE	CAPACITIES (PROPANE)[1][3]			INLET CONNECTION, IN.	OUTLET CONNECTION, IN.	OUTLET ADJUSTMENT RANGE		OUTLET PRESSURE SETTING		NOMINAL RELIEF VALVE START-TO-DISCHARGE	
	BTU / hr	SCMH	kg/hr			psig	bar	psig	bar	psig	bar
R122H-AAJ	1,100,000	12.4	21.43	1/4 FNPT	1/2 FNPT	Non-Adjustable		10	0.69	----	----
R122H-AAJXB[2]											
R222H-BGK	1,700,000	19.1	33.12	1/2 FNPT	1/2 FNPT	4 to 6	0.28 to 0.41	5	0.34	9	0.62
R222H-BGJ	1,800,000	20.2	35.06			8 to 12	0.55 to 0.82	10	0.69	16	1.10
R222H-HGK	1,700,000	19.1	33.12	FPOL	1/2 FNPT	4 to 6	0.28 to 0.41	5	0.34	9	0.62
R222H-HGJ	1,800,000	20.2	35.06			8 to 12	0.55 to 0.82	10	0.69	16	1.10
R222H-JGK	1,875,000	21.1	36.53	FPOL	3/4 FNPT	4 to 6	0.28 to 0.41	5	0.34	9	0.62
R222H-JGJ	1,875,000	21.1	36.53			8 to 12	0.55 to 0.82	10	0.69	16	1.10
R222H-DGK	2,000,000	22.5	38.96	3/4 FNPT	3/4 FNPT	4 to 6	0.28 to 0.41	5	0.34	9	0.62
R222H-DGJ	2,000,000	22.5	38.96			8 to 12	0.55 to 0.82	10	0.69	16	1.10
R622H-BGK	2,000,000	22.5	38.96	1/2 FNPT	1/2 FNPT	4 to 6	0.28 to 0.41	5	0.34	----	----
R622H-HGK				FPOL							
R622H-JGK	2,250,000	25.3	43.83	FPOL	3/4 FNPT						
R622H-BGJ	2,100,000	23.6	40.91	1/2 FNPT	1/2 FNPT	8 to 12	0.55 to 0.83	10	0.69	----	----
R622H-DGJ	2,400,000	27.0	46.75	3/4 FNPT	3/4 FNPT						
R622H-HGJ	2,100,000	23.6	40.91	FPOL	1/2 FNPT						
R622H-JGJ	2,250,000	25.3	43.83		3/4 FNPT						

1. Based on 30 psig / 2.1 bar inlet pressure and 20% droop.
2. Vent over gauge taps.
3. Metric conversion is based on 2516 BTU/ft³ of gas at 60°F / 16°C.

Second-Stage Regulators

Regulators

FISHER



TYPE R222



TYPE R622



TYPE R642



TYPE R652



TYPE HSRL

Types R222, R622, R642, R652 and HSRL Second-Stage regulators are Underwriters Laboratories (UL®) listed regulators designed to reduce the outlet pressure from a First-Stage regulator, usually 10 psig / 0.69 bar to 11 in. w.c. / 27 mbar, in domestic installations. Vents are screened with standard orientation over the inlet, but other orientations are available. Fisher™ Second-Stage regulators are painted palm green for easy identification. Types R222, R622, R642 and R652 are equipped with a stainless steel inlet screen to reduce the amount of debris entering the regulator and have a temperature rating of -20 to 160°F / -29 to 71°C, but have passed Fisher internal testing for lockup, relief start-to-discharge and reseal down to -40°F / -40°C.

Type R222 is designed for small domestic applications up to 650,000 BTU per hour / 7.3 SCMH. The unit provides the same features as the Type R622 in a smaller package and its design provides a recommended replacement life of 20 years.

Type R622 is designed for Two-Stage domestic applications up to 1,400,000 BTU per hour / 15.8 SCMH. The Type R622's time proven design and corrosion resistant materials, provide a recommended replacement life of 20 years.

Type R622 contains a high performance relief valve and a large 3/4 in. screened vent to limit downstream pressure to less than 2 psig / 0.14 bar in an overpressure situation as required by NFPA 58. The relief valve design exceeds the industry standard by limiting the downstream pressure to 2 psig / 0.14 bar even in a double failure situation when used with a Type R622H or R122H First-Stage regulator. The Type R622 is adjustable from 9 to 20 in. w.c. / 22 to 50 mbar.

For easy system checks, the Type R622 has 1/8 in. NPT built-in gauge taps orificed to a No. 54 drill size, on both the upstream and downstream sides. This regulator also features a large 3/4 in. drip-lip vent design.

Types R642 and R652 are designed for domestic applications up to 920,000 / 10.4 and 1,000,000 BTU per hour / 11.3 SCMH, respectively. These units provide all the same features as the Type R622, including the 20-year recommended replacement life and double failure protection, in an angle body for the Type R642 and backmounted design for the Type R652.

Type HSRL is an UL listed regulator designed for light commercial applications up to 2,600,000 BTU per hour / 29.3 SCMH. It utilizes a high strength cast iron body and a 3/4 in. NPT drip lip vent design. The PFC and SFC feature an angle-body design. The design also includes a high capacity internal relief valve and a 20-year recommended replacement life.

Second-Stage Regulators

TYPE	CAPACITIES (PROPANE)[1]			INLET CONNECTION, IN.	OUTLET CONNECTION, IN.	OUTLET PRESSURE RANGE		OUTLET PRESSURE SETTING	
	BTU / hr	SCMH	kg/hr			In. w.c.	mbar	In. w.c.	mbar
R222-BAF[2]	650,000	7.3	12.66	1/2 FNPT	1/2 FNPT	9.5 to 13	24 to 32	11	27
R622-BCF[2]	875,000	9.8	17.05	1/2 FNPT	1/2 FNPT	9 to 13	22 to 32		
R622-CFF[2][4]	1,400,000	15.8	27.27	1/2 FNPT	3/4 FNPT				
R622-DFF[5]				3/4 FNPT					
R642-DFF[2]	920,000	10.4	17.92						
R652-CFF	1,000,000	11.3	19.48	1/2 FNPT					
R652-DFF				3/4 FNPT					
R622-CFGXA[3]	1,125,000	12.7	21.92	1/2 FNPT	3/4 FNPT	13 to 20	32 to 50	18	45
HSRL-BFC	2,300,000	25.9	44.80	3/4 FNPT	3/4 FNPT	9 to 13	22 to 32	11	27
HSRL-PFC									
HSRL-CFC	2,600,000	29.3	50.65	1 FNPT	1 FNPT				
HSRL-SFC									

1. Based on 10 psig / 0.69 bar inlet pressure and 2 in. w.c. / 5 mbar droop.
2. Consult factory for alternate vent over outlet position as "XA" option
3. Vent over Inlet as standard
4. Consult factory for alternate vent opposite gauge taps as "XB" option
5. Consult factory for alternate vent over outlet position as "XB" option

EMERSON

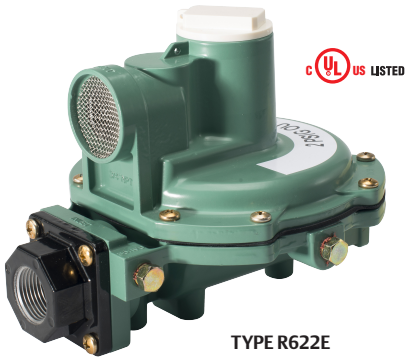

TYPE R622E



TYPE R652E

Types R622E and R652E, Two-psi Service Regulators, are designed for Two-psi LPG Regulator Systems and listed by Underwriters Laboratories (UL®). These units are installed downstream from a First-Stage regulator and reduce an inlet pressure of 10 psig / 0.69 bar to a nominal 2 psig / 0.14 bar outlet pressure. Two-psi Service Regulators are designed for domestic applications that supply 2 psig / 0.14 bar LPG to a line regulator located inside the building. In most cases a manifold is used with corrugated stainless steel tubing (CSST) as well as other acceptable piping materials for routing to the line pressure regulator supplying approximately 11 in. w.c. / 27 mbar to appliance regulators.

Types R622E and R652E, Two-psi Service Regulators feature a combination relief valve and large vent that provide overpressure protection and exceed UL requirements. Both units have a stainless steel inlet screen to reduce the amount of debris from entering them. Fisher™ Types R622E and R652E are painted green with a white closing cap for easy identification and have a temperature rating of -20 to 160°F / -29 to 71°C, but have passed Fisher internal testing for lockup, relief start-to-discharge and reseal down to -40°F / -40°C.

Type R622E – Time proven design constructed of corrosion resistant materials, the Type R622E is designed to provide a recommended replacement life of 20 years. Fisher regulator's fabric-reinforced diaphragm and large diaphragm area provide accurate regulation at increased capacities. All components provide superior resistance to field conditions that may cause wear and corrosion. Built-in 1/8 in. taps (orificed to a number 54-drill size) on the upstream and downstream sides allow for easy gas system checks.

Type R652E – Provides the same features as the Type R622E, includes a 20-year recommended replacement life with a back mount design.

Typical Two-psi Installation

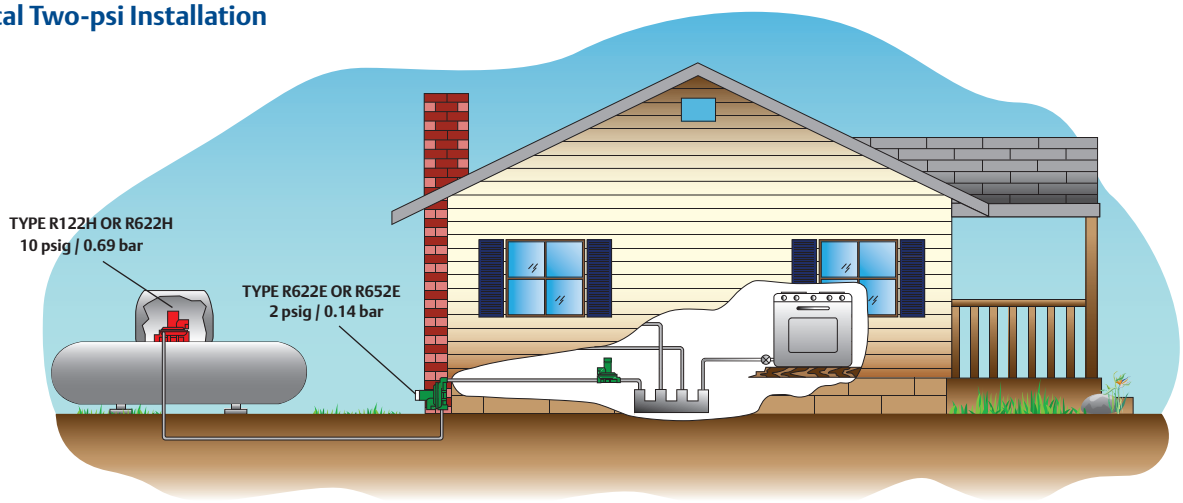

Two-psi Service Regulators

TYPE	CAPACITIES (PROPANE)[1]			CONNECTION INLET X OUTLET, IN.	OUTLET PRESSURE RANGE		OUTLET PRESSURE SETTING	
	BTU / hr	SCMH	kg/hr		psig	bar	psig	bar
R622E-BCH	1,460,000	16.4	28.44	1/2 x 1/2 FNPT	1 to 2.2	69 mbar to 0.15	2	0.14
R622E-DCH	1,680,000	18.9	32.73	3/4 x 3/4 FNPT				
R652E-DFH	1,500,000	16.9	29.22					

1. Based on 10 psig / 0.69 bar inlet pressure and 20% droop.

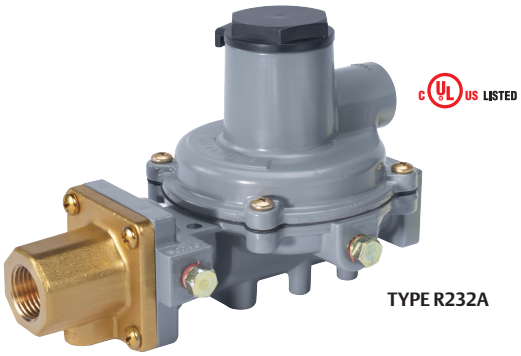

TYPE R232A

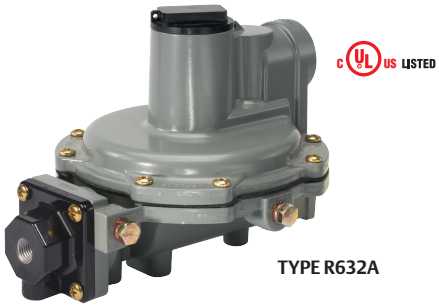

TYPE R632A

Integral Two-Stage regulators combine a First-Stage regulator and a Second-Stage regulator into one compact unit. Recommended for installations where piping distance is short, integral Two-Stage regulators provide all of the advantages of Two-Stage regulation (refer to page 24). Fisher™ integral Two-Stage regulators are color coded gray for easy identification. Vents are screened with standard Second-Stage vent orientation over the outlet. The Types R632A and R232A first-stage screened vent is threaded to accept a 1/4 in. OD copper tube inverted flare with a 7/16-24 UN thread. The Types R232A and R632A have a temperature rating of -20 to 160°F / -29 to 71°C, but have passed Fisher internal testing for lockup, relief start-to-discharge and reseal down to -40°F / -40°C.

Type R632A – is an Underwriters Laboratories (UL®) listed regulator with a capacity of up to 950,000 BTU per hour / 10.7 SCMH, recommended for on-site cylinder installations, mobile homes and domestic installations, where separation of the First and Second-Stage is not cost effective. This unit offers a POL inlet connection for the easy drop-in replacement of Single-Stage regulators.

Type R632A's high capacity relief valve and large 3/4 in. screened vent limit downstream pressure to less than 2 psig / 0.14 bar in an overpressure situation as required by NFPA 58. Type R632A is adjustable from 9 to 13 in. w.c. / 22 to 32 mbar, with a factory setpoint of 11 in. w.c. / 27 mbar. The Type R632A features include the 20-year recommended replacement life.

Type R632A has 1/8 in. NPT built-in gauge taps orificed to a No. 54 drill size, on the upstream and downstream sides. These taps provide easy access for testing the proper operation of the First and Second-Stage while the system is pressurized. This regulator also features a large 3/4 in. drip-lip vent to reduce the chance of blockage by freezing rain or sleet when properly installed with the vent pointing down.

Type R232A – Designed for installations with small capacity loads up to 550,000 BTU per hour / 6.2 SCMH. With an overall length of 6.5 or 7 in. / 165 or 178 mm for NPT or FPOL connections respectively, this compact unit fits easily into confined spaces and is ideal for ASME tanks used on small domestic loads. Intermediate and outlet gauge taps facilitate easy system testing. A 3/8 in. NPT vent allows easy installation of vent piping. Use of a valve stem and lever provide stable regulation and excellent durability. A large fabric-reinforced diaphragm provides accurate regulation. The large orifice assists in minimizing freeze problems. Stainless steel internal and corrosion resistant coatings provide excellent corrosion resistance. The Type R232A also has the design that provides a recommended replacement life of 20 years.

Twin Cylinder Installations – The Type R232A can also be used on twin cylinder hook-ups found on travel trailers and stationary applications. These units offer a drip-lip vent style for installations without a vent protector. Proper installation requires the vent to be pointed down in a vertical position. Additional protection may be required if road splatter is a problem.

Integral Two-Stage Regulators

TYPE NUMBER	CAPACITIES (PROPANE)[1]			INLET CONNECTION, IN.	OUTLET CONNECTION, IN.	OUTLET ADJUSTMENT RANGE		OUTLET PRESSURE SETTING	
	BTU / hr	SCMH	kg/hr			In. w.c.	mbar	In. w.c.	mbar
R232A-BBF	550,000	6.2	10.71	1/4 FNPT	1/2 FNPT	10.2 to 13	25 to 32	11	27
R232A-BBFXA[2]									
R232A-HBF				FPOL					
R232A-HBFXA[2]									
R632A-BCF	850,000	9.6	16.56	1/4 FNPT	1/2 FNPT	9 to 13	22 to 32		
R632A-BCFXA[2]									
R632A-CFF	950,000	10.7	18.51		3/4 FNPT				
R632A-CFFXA[2]									
R632A-HCF	850,000	9.6	16.56	FPOL	1/2 FNPT				
R632A-HCFXA[2]									
R632A-JFF	850,000	9.6	16.56		3/4 FNPT				
R632A-JFFXA[2]									

1. Based on 30 psig / 2.1 bar inlet pressure and 2 in. w.c. / 5 mbar droop.
2. First and Second-Stage spring case vents opposite gauge taps.

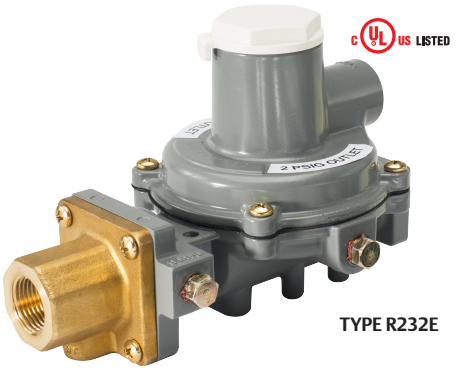

TYPE R232E

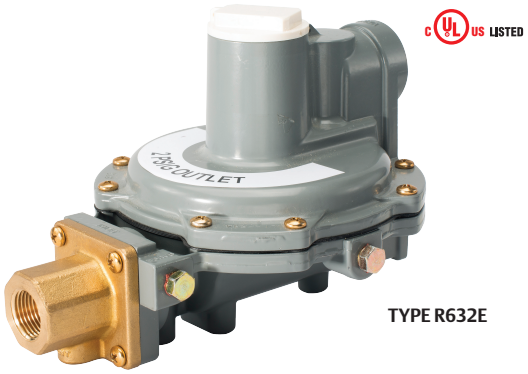

TYPE R632E

Integral Two-psi regulators combine a First-Stage regulator and a Second-Stage, Two-psi regulator into one compact unit. Recommended for installations where piping distance is short, integral Two-Stage, Two-psi regulators provide all of the advantages of Two-Stage regulation (refer to page 23). Fisher™ integral Two-Stage, Two-psi regulators are color coded gray with a white cap and white UV rated cover for easy identification. Vents are screened with standard Second-Stage vent orientation over the outlet. The Types R632E and R232E first-stage screened vent is threaded to accept a 1/4 in. OD copper tube inverted flare with a 7/16-24 UN thread. The Types R23E and R632E have a temperature rating of -20 to 160°F / -29 to 71°C, but have passed Fisher internal testing for lockup, relief start-to-discharge and reseal down to -40°F / -40°C.

Type R632E – is an Underwriters Laboratories (UL®) listed regulator with a capacity of up to 810,000 BTU per hour / 9.1 SCMH, recommended for on-site cylinder installations, mobile homes and domestic installations, where separation of the First and Second-Stage is not cost effective. This unit offers a POL inlet connection for the easy drop-in replacement of Single-Stage regulators.

Type R632E's high capacity relief valve and large 3/4 in. screened vent limit downstream pressure to less than 5 psig / 0.34 bar in an overpressure situation as required by NFPA 58. Type R632E is adjustable from 1 to 2.2 psig / 69 to 152 mbar, with a factory setpoint of 11 in. w.c. / 27 mbar. The Type R632E features a 20-year recommended replacement life.

Type R632E has 1/8 in. NPT built-in gauge taps orificed to a No. 54 drill size, on the upstream and downstream sides. These taps provide easy access for testing the proper operation pressure of the First and Second-Stage while the system is pressurized. This regulator also features a large 3/4 in. drip-lip vent to reduce the chance of blockage by freezing rain or sleet when properly installed with the vent pointing down.

Type R232E – Designed for installations with small capacity loads up to 450,000 BTU per hour / 5.1 SCMH. With an overall length of 6.5 or 7 in. / 165 or 178 mm for NPT or FPOL connections respectively, this compact unit fits easily into confined spaces and is ideal for ASME tanks used on small domestic loads. Intermediate and outlet gauge taps facilitate easy system testing. A 3/8 in. NPT vent allows easy installation of vent piping. Use of a valve stem and lever provide stable regulation and excellent durability. A large fabric-reinforced diaphragm provides accurate regulation. The large orifice assists in minimizing freeze problems. Stainless steel internal and corrosion resistant coatings provide excellent corrosion resistance. The Type R232E also has the design that provides a recommended replacement life of 20 years.

Twin Cylinder Installations – The Type R232E can also be used on twin cylinder hook-ups found on travel trailers and stationary applications. These units offer a drip-lip vent style for installations without a vent protector. Proper installation requires the vent to be pointed down in a vertical position. Additional protection may be required if road splatter is a problem.

Integral Two-psi Regulators

TYPE	CAPACITIES (PROPANE)[1]			INLET CONNECTION, IN.	OUTLET CONNECTION, IN.	OUTLET ADJUSTMENT RANGE		OUTLET PRESSURE SETTING	
	BTU / hr	SCMH	kg/hr			psig	mbar	psig	mbar
R232E-BBH	500,000	5.6	9.74	1/4 FNPT	1/2 FNPT	1 to 2.2	69 to 152	2	138
R232E-BBHXA[2]									
R232E-HBH				FPOL					
R232E-HBHXA[2]									
R632E-BCH	850,000	9.6	16.56	1/4 FNPT	1/2 FNPT	1 to 2.2	69 to 152		
R632E-BCHXA[2]									
R632E-CFH	850,000	9.6	16.56		3/4 FNPT				
R632E-CFHXA[2]									
R632E-HCH	900,000	10.1	17.53	FPOL	1/2 FNPT				
R632E-HCHXA[2]									
R632E-JFH	850,000	9.6	16.56		3/4 FNPT				
R632E-JFHXA[2]									

1. Based on 30 psig / 2.1 bar inlet pressure and 20% droop.
2. First and Second-Stage spring case vents opposite gauge taps.

Commercial/Industrial High-Pressure Regulators

Regulators

FISHER



TYPE 67CW TYPE 67CH TYPE 67CH-747 TYPE 67CD TYPE 67CN

67C Series

Suitable for liquid or vapor service, the 67C Series high-pressure (pounds-to-pounds) regulators are used on a variety of applications. All types within the series have a 1/4 in. FNPT side outlet in which a pressure gauge (J500 Series) can be installed. The compact size of the 67C Series regulators make them particularly useful on installations where space is limited. The regulator design utilizes precise guiding of the valve plug to provide close regulation and high performance. The LPG 67C Series has a temperature rating of -20 to 180°F / -29 to 82°C.

Type 67CW – Standard regulator with wrench adjustment.

Type 67CH – Standard regulator with handwheel adjustment. Also available with 1/4 in. NPT threaded exhaust port, Type 67CH-747(2).

Type 67CD – With dial calibration accuracy nearly equivalent to that of a commercial pressure gauge, the Type 67CD eliminates the need for a pressure gauge on portable applications.

Outlet pressure is calibrated on the spring case allowing visual adjustment of the outlet pressure without having to use a pressure gauge. The unit is ideal for service where gauge breakage is a problem.

Type 67CN – Extremely compact unit with a fixed (non-adjustable) outlet setting and a tamper resistant spring case. Three different setpoints are available: 10, 15 and 20 psig / 0.69, 1.0 and 1.4 bar.

Note: 67C Series regulators do not have an internal relief and should be installed with additional/external overpressure protection. These units should not be installed in fixed piping serving 14 in. w.c. / 35 mbar appliance systems. Please consult with your LPG Equipment Distributor for more information.

High-Pressure Regulators

TYPE	DESCRIPTION	CAPACITIES (PROPANE)(1)			OUTLET PRESSURE SETTING		OUTLET ADJUSTMENT RANGE		INLET AND OUTLET CONNECTIONS, IN.
		BTU / hr	SCMH	kg/hr	psig	bar	psig	bar	
67CW-683	Basic Regulator (Wrench Adjustment)	675,000	7.6	13.15	15	1.0	3 to 20	0.21 to 1.4	1/4 FNPT
67CW-684		750,000	8.4	14.61	20	1.4	3 to 35	0.21 to 2.4	
67CW-685		1,200,000	13.5	23.38	40	2.8	30 to 60	2.1 to 4.1	
67CW-701		1,000,000	11.3	19.48	50	3.4	50 to 120	3.4 to 8.3	
67CH-751	Basic Regulator (Handwheel Adjustment)	675,000	7.6	13.15	15	1.0	3 to 20	0.21 to 1.4	
67CH-743		750,000	8.4	14.61	20	1.4	3 to 35	0.21 to 2.4	
67CH-742		1,200,000	13.5	23.38	40	2.8	30 to 60	2.1 to 4.1	
67CH-741		1,000,000	11.3	19.48	50	3.4	50 to 120	3.4 to 8.3	
67CH-745	Basic Regulator (Handwheel Adjustment) with Type M318 installed	750,000	8.4	14.61	20	1.4	3 to 35	0.21 to 2.4	
67CH-747(2)	Basic Regulator (Handwheel Adjustment with 1/4 in. NPT Exhaust Vent)	750,000	8.4	14.61	20	1.4	3 to 35	0.21 to 2.4	
67CD-100	Dial Cap Adjustment	675,000	7.6	13.15	15	1.0	5 to 20	0.34 to 1.4	
67CD-102		1,200,000	13.5	23.38	40	2.8	20 to 50	1.4 to 3.4	
67CD-103		1,000,000	11.3	19.48	50	3.4	40 to 100	2.8 to 6.9	
67CN-106	Non-Adjustable	400,000	4.5	7.79	10	0.69	Non-Adjustable		
67CN-104		600,000	6.7	11.69	15	1.0	Non-Adjustable		
67CN-105		750,000	8.4	14.61	20	1.4	Non-Adjustable		

1. Based on inlet pressure 20 psig / 1.4 bar greater than outlet with 20% droop; Liquid capacity = 3 to 5 GPH / 11.4 to 18.9 l/hr.
2. Per CSA B149.1, section 5.5.1

EMERSON



64 SERIES

64 Series

High-pressure (pounds-to-pounds) regulators usually reduce tank pressure to an intermediate pressure for use by another regulator. They may be used as high-pressure regulators on distribution systems when used in conjunction with a First-Stage downstream regulator. The Type 64SR may be used for First-Stage when set at 10 psig / 0.69 bar. They are also used for Final-Stage service on high-pressure burners in crop dryers and tobacco curers, as well as other medium sized commercial/industrial applications.

The 1/4 in. FNPT side outlet, which is normally plugged, provides an opening for an outlet pressure gauge. Standard 64's Series are capable of handling liquid or vapor at temperatures under 150°F / 66°C. A cover or auxiliary vent assembly should be used to protect the 1/4 in. FNPT regulator vent opening on outdoor installations. Temperature rating for the 64 and 64SR Series has a temperature rating from -20 to 150°F / -29 to 66°C.

64 Series – is an adjustable high-pressure regulator with a wide range of available outlet pressure ranges. It does not contain a relief valve. It should always be used in conjunction with a downstream regulator and/or separate relief devices in compliance with NFPA 58 overpressure protection requirements.

Type 64SR – is a high-pressure regulator, which has an internal relief valve. As such it may be used as a Final-Stage regulator on high-pressure systems. It may also be used as a First-Stage regulator when set at 10 psig / 0.69 bar or less.

Note: 64 Series regulators do not have an internal relief and should be installed with additional/external overpressure protection. These units should not be installed in fixed piping serving 14 in. w.c. / 35 mbar appliance systems. Please consult with your LPG Equipment Distributor for more information.

Note: If the installation location makes the ignition of vented gas a possibility, then a vent line should be installed from the Type 64SR vent to a safe location.

High-Pressure Regulators

TYPE	DESCRIPTION	CAPACITIES (PROPANE)[1]			OUTLET PRESSURE SETTING		OUTLET ADJUSTMENT RANGE		INLET AND OUTLET CONNECTIONS, in.
		BTU / hr	SCMH	kg/hr	psig	bar	psig	bar	
64-33	Basic Regulator	2,625,000	29.6	51.14	10	0.69	3 to 15	0.21 to 1.0	1/2 FNPT
64-35		3,600,000	40.5	70.13	20	1.4	5 to 35	0.34 to 2.4	
64-36		4,150,000	46.7	80.84	40	2.8	30 to 60	2.1 to 4.1	
64-222		5,250,000	59.1	102.27	50	3.4	35 to 100	2.4 to 6.9	
64SR-21	With Internal Relief Valve	2,625,000	29.6	51.14	10	0.69	3 to 15	0.21 to 1.0	
64SR-22		3,000,000	33.8	58.44	15	1.0	5 to 20	0.34 to 1.4	
64SR-23		3,600,000	40.5	70.13	20	1.4	5 to 35	0.34 to 2.4	

1. Based on inlet pressure 20 psig / 1.4 bar greater than outlet with 20% droop; Liquid capacity = 160 GPH / 606 l/hr.



TYPE 627 DIRECT-OPERATED REGULATOR



TYPE 630 DIRECT-OPERATED REGULATOR

For Commercial and Industrial high-pressure applications like factories, office building, restaurants, etc., Emerson has a wide variety of products. For ease of reference, only the most popular commercial and industrial regulators are shown in these pages. Other orifice sizes, body sizes and outlet pressure ranges are available. The higher capacities on commercial and industrial installations usually require a Two-Stage regulator system.

Note: Because of various spring ranges and orifice sizes, all commercial and industrial regulators should be individually sized for the particular installation. Consult specific product bulletins for maximum pressure ratings. Contact your local LPG Equipment Distributor for assistance.

Types 627 and 630 – Large capacity direct-operated high-pressure regulators designed for loads up to 10,700,000 and 14,000,000 BTU per hour / 120 and 157 SCMH, respectively. The Types 627 and 630 are normally used in conjunction with Type CS400 units, however, they can also be used on Final-Stage (pounds-to-pounds) service. Additional overpressure protection is recommended to prevent excessive build-up in the downstream line. The diaphragm case and body of the Type 627 can be rotated in four positions to allow easy installation. Additional configurations of the Type 627 with internal relief and control line connections for monitor systems are available. For both the Types 627 and 630, additional pressure ranges and orifice sizes are available. Temperature ratings for the Types 627 and 630 is -20 to 160°F / -29 to 71°C.

For Liquid Service, Types 627W and MR95H are available.

Note: Types 627 and 630 regulators do not have an internal relief and should be installed with additional/external overpressure protection. These units should not be installed as part of a two-stage system in fixed piping serving 14 in. w.c. / 35 mbar appliance systems unless additional overpressure protection is installed that will make the system compliant with NFPA 58 requirements for a two-stage system. Please consult with your LPG Equipment Distributor for more information.

Flanged Bodies – The Types 630 and 627 are available with flanged bodies. Flanges are available for 2 in. CL300 FF.

Overpressure Protection – The Type 627 is also available in monitor configurations. Note that the Type 627 monitor regulators have unique type numbers. For more information on monitor overpressure protection, see page 42.

Fluorocarbon (FKM) Trim – The Type 627 is available with Fluorocarbon (FKM) Trim for high temperature applications such as vaporizors. Part numbers are listed below with a 'V' suffix. Temperature ratings for the Type 627 with Fluorocarbon (FKM) Trim is 0 to 180°F / -18 to 82°C.

Type 1301F – The proven reliability and accurate regulation of the Type 1301F regulator makes it ideal for numerous high-pressure drop applications. This multi-purpose regulator can be used as pilot supply or pressure-loading regulators where high-pressure operating medium must be reduced for use by gas regulator pilots or pressure-loaded regulators.

UL® Listed Type 627 Constructions

TYPE	CAPACITIES[1] PROPANE			ORIFICE SIZE		INLET AND OUTLET CONNECTION	OUTLET PRESSURE RANGE		SETPOINT		MAXIMUM OPERATING INLET PRESSURE	
	BTU / hr	SCMH	kg/hr	In.	mm		psig	bar	psig	bar	psig	bar
627-5810	6,080,000	68.4	118.44	3/8	9.5	3/4 in. FNPT	5 to 20	0.34 to 1.4	10	0.69	250	17.2
627-5810V												
627-6210	10,755,000	121	209.51	1/2	13							
627-6210V												
627-7710	10,773,000		209.86			1 in. FNPT						
627-7710V												

1. For UL listed Type 627 configurations, capacity based on inlet pressure of 30 psig / 2.1 bar Internal registration and 20% droop.
NOTE: Additional spring ranges and body styles available. Ask your LPG Equipment Distributor for additional configurations and for more information.
Models ending in "V" have FKM elastomers.

Non-UL® listed Type 627 Constructions

TYPE[2]	CAPACITIES[1] PROPANE			ORIFICE SIZE		INLET AND OUTLET CONNECTION	OUTLET PRESSURE RANGE		SETPOINT		MAXIMUM OPERATING INLET PRESSURE	
	BTU / hr	SCMH	kg/hr	In.	mm		psig	bar	psig	bar	psig	bar
627R-117[2]	7,490,000	121	209.51	1/2	13	3/4 in. FNPT	5 to 20	0.34 to 1.4	10	0.69	200	13.8
627M-421[3]	10,702,000	121									250	17.2
627R-197[2]	7,584,000	121	209.86			1 in. FNPT					200	13.8
627M-471[3]	8,603,000	121									250	17.2
627-497	22,564,000	167	289.02				15 to 40	1.0 to 2.8	40	2.8		
627-577	20,948,000	235	408.07			2 in. FNPT						

1. For Non-UL listed Types 627 and 630 configurations, capacity based on inlet pressure 20 psig / 1.4 bar greater than outlet pressure, Internal registration and 20% droop.
2. "R" denotes token relief. Check with your LPG Equipment Distributor on relief capacities.
3. For monitor applications. Standard with blocked throat and external sensing.
NOTE: Additional spring ranges and body styles available. Ask your LPG Equipment Distributor for additional configurations and for more information.
Models ending in "V" have FKM elastomers.

Type 630 Regulator

TYPE	CAPACITIES IN BTU PER HOUR / SCMH PROPANE[2]			ORIFICE SIZE		INLET AND OUTLET CONNECTION	OUTLET PRESSURE RANGE		SETPOINT		MAXIMUM OPERATING INLET PRESSURE	
	BTU / hr	SCMH	kg/hr	In.	mm		psig	bar	psig	bar	psig	bar
630-104-78	14,000,000	158	272.72	1/2	13	2 in. FNPT	8 to 20	0.55 to 1.4	10	0.69	250	17.2
630-104-78V	14,000,000	158	272.72	1/2	13	2 in. FNPT	8 to 20	0.55 to 1.4	10	0.69	250	17.2

1. For Non-UL listed Types 627 and 630 configurations, capacity based on inlet pressure 20 psig / 1.4 bar greater than outlet pressure, Internal registration and 20% droop.
NOTE: Additional spring ranges and body styles available. Ask your LPG Equipment Distributor for additional configurations and for more information.
Models ending in "V" have FKM elastomers.

See Additional Product Listings on pages 90 to 99.

Commercial/Industrial High-Pressure Regulators

Regulators

FISHER

For Commercial and Industrial high-pressure applications, such as distributed community systems, factories, office buildings, restaurants, Emerson has a wide variety of products and solutions. For ease of reference, only the most popular commercial and industrial regulators are shown on these pages. Other orifice sizes, body sizes and outlet pressure ranges are available. The higher capacities on commercial and industrial installations usually require a Two-stage regulator system. Temperature ratings for the Type 99 is -20 to 180°F / -29 to 82°C.

Note: Because of various spring ranges and orifice sizes, all commercial and industrial regulators should be individually sized for the particular installation. Consult specific product bulletins for maximum pressure ratings. Contact your local LPG Equipment Distributor for assistance.

Type 99 – Pilot-operated unit keeps outlet pressure constant despite varying flow rates and inlet pressures. Designed to handle loads up to 74,318,000 BTU per hour / 837 SCMH, the Type 99 is ideal for multiple customer installations. The unique pilot design, with fast opening and closing operation, makes the Type 99 ideal for large industrial boiler applications. The Type 99 can be used for low or high-pressure applications. A downstream control line is required. Additional overpressure protection is recommended to prevent excessive buildup in the downstream line.

Note: Type 99 regulators do not have an internal relief and should be installed with additional/external overpressure protection. These units should not be installed as part of a two-stage system in fixed piping serving 14 in. w.c. / 35 mbar appliance systems unless additional overpressure protection is installed that will make the system compliant with NFPA 58 requirements for a two-stage system. Please consult with your LPG Equipment Distributor for more information.

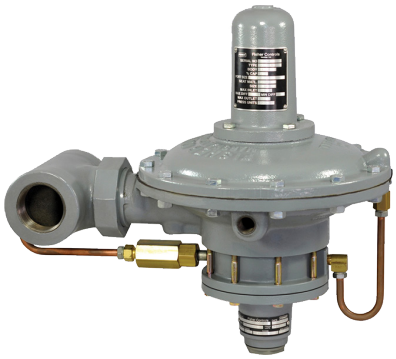

TYPE 99-901PH PILOT-OPERATED REGULATOR

Flanged Bodies - 99F Series is equipped with 2 in. CL300 flanged bodies.

Overpressure Protection - The Type 99 is also available in monitor configurations. Note that the Type 99 monitor regulators have unique type numbers. For more information on monitor overpressure protection, see page 42.

Pilot-Operated High-Pressure Commercial/Industrial Regulators

TYPE	CAPACITIES (PROPANE)[1]			ORIFICE SIZE		INLET AND OUTLET CONNECTION	OUTLET PRESSURE RANGE		OUTLET PRESSURE SETTING		MAXIMUM OPERATING INLET PRESSURE	
	BTU / hr	SCMH	kg/hr	In.	mm		psig	bar	psig	bar	psig	bar
99-510P	29,400,000	331	572.71	7/8	22	2 in. FNPT	7 in. w.c. to 2	17 mbar to 0.14	1	69 mbar	250	17.2
99F-510P						2 in. / DN 50 CL300 FF						
99-511P	33,206,000	374	646.85			2 in. FNPT	1 to 5	69 mbar to 0.34	5	0.34		
99F-511P						2 in. / DN 50 CL300 FF						
99-513P	36,368,000	409	708.45			2 in. FNPT	2 to 10	0.14 to 0.69	10	0.69		
99F-513P						2 in. / DN 50 CL300 FF						
99-512P	37,950,000	427	739.27			2 in. FNPT	5 to 15	0.34 to 1.0	15	1.0		
99F-512P						2 in. / DN 50 CL300 FF						
99-515P	41,112,000	463	800.86			2 in. FNPT	10 to 20	0.69 to 1.4	20	1.4		
99F-515P						2 in. / DN 50 CL300 FF						
99-903P	44,275,000	498	862.48			2 in. FNPT	10 to 65	0.69 to 4.5	30	2.1		
99F-903P						2 in. / DN 50 CL300 FF						
99-502PH	50,600,000	570	985.69	1-1/8	29	2 in. FNPT	1 to 5	69 mbar to 0.34	5	0.34	300	20.7
99F-502PH						2 in. / DN 50 CL300 FF						
99-503PH	61,668,000	694	1201.29			2 in. FNPT	2 to 10	0.14 to 0.69	10	0.69		
99F-503PH	61,668,000	694	1201.29			2 in. / DN 50 CL300 FF						
99-504PH	63,250,000	712	1232.11			2 in. FNPT	5 to 15	0.34 to 1.0	15	1.0		
99F-504PH	63,250,000	712	1232.11			2 in. / DN 50 CL300 FF						
99-505PH	67,993,000	765	1324.50			2 in. FNPT	10 to 20	0.69 to 1.4	20	1.4		
99F-505PH	67,993,000	765	1324.50			2 in. / DN 50 CL300 FF						
99-901PH	74,318,000	837	1447.71			2 in. FNPT	10 to 65	0.69 to 4.5	30	2.1		
99F-901PH	74,318,000	837	1447.71			2 in. / DN 50 CL300 FF						

1. Capacity based on inlet pressure 20 psig / 1.4 bar greater than outlet pressure, external registration and 0.1 to 0.3 psi / 6.9 to 21 mbar proportional band.
NOTE: Additional spring ranges and body styles are available. Ask your LPG Equipment distributor for more information.

EMERSON

Type 1098 - The Type 1098-EGR regulator provides large capacities for use in large commercial applications and large distributed community systems. Designed to handle loads from 170,000,000 BTU / 1910 SCM (2 in. size) to in excess of 1,000,000,000 BTU / 11,234 SCM (4 in. size) and rated to 75 psig / 5.2 bar for Maximum Outlet Pressure, the Type 1098H is a regulator unmatched in performance in the LPG Industry. The Type 1098's pilot-operated two-path system is designed to quickly respond to sudden changes in the downstream demand, making this regulator ideal for fuel gas supply to industrial boilers, furnaces, ovens and mixers. Temperature rating for the Type 1098 is -20 to 180°F / -29 to 82°C. Actuator/diaphragm are size 40.

Type 1098H - The Type 1098H-EGR regulator also provides large capacities used in systems similar to Type 1098. The Type 1098H uses a special cast iron actuator assembly that increases the Maximum Downstream Pressure rating of the standard Type 1098 up to 300 psig / 20.7 bar, offering an even greater level of protection with outlet pressure settings up to 125 psig / 8.6 bar. Temperature rating for the Type 1098H is -20 to 180°F / -29 to 82°C. Actuator/diaphragm are size 30.

Flanged Bodies - The Types 1098 and 1098H are available with flanged bodies. Flanges are available in 2, 3 and 4 in. body sizes and CL300 FF end connection.

Note: Type 1098 regulators do not have an internal relief and should be installed with additional/external overpressure protection. These units should not be installed as part of a two-stage system in fixed piping serving 14 in. w.c. / 35 mbar appliance systems unless additional overpressure protection is installed that will make the system compliant with NFPA 58 requirements for a two-stage system. Please consult with your LPG Equipment Distributor for more information.



TYPE 1098-L22 PILOT-OPERATED REGULATOR

Overpressure Protection - The Types 1098 and 1098H is also available in monitor configurations. Note that the Type 1098H regulators may be used either as the worker or monitor regulator. For more information on monitor overpressure protection, see page 42.

The Type 1098 regulator is a highly advanced regulator with many configurations for various applications. **Always consult Emerson to discuss your application prior to placing your order.**

Pilot-Operated High-Pressure Commercial/Industrial Regulators

TYPE	CAPACITIES (PROPANE)			ORIFICE SIZE		INLET AND OUTLET CONNECTION	OUTLET PRESSURE RANGE		OUTLET PRESSURE SETTING		MAXIMUM OPERATING INLET PRESSURE	
	BTU / hr	SCMH	kg/hr	In.	mm		psig	bar	psig	bar	psig	bar
1098-L21	170,500,000[1]	1915[1]	3321.34	2-3/8	60	2 in. FNPT	2 to 10	0.14 to 0.69	10	0.69	400	27.6
1098-L22	215,300,000[2]	2419[2]	4194.04				3 to 40	0.21 to 2.7	20	1.4		
1098-L23	322,300,000[3]	3621[3]	6278.40				35 to 75	2.4 to 5.2	50	3.4		
1098-F21	170,500,000[1]	1915[1]	3321.34			2 in. / DN 50 CL300 RF	2 to 10	0.14 to 0.69	10	0.69		
1098-F22	215,300,000[2]	2419	4194.04				3 to 40	0.21 to 2.7	20	1.4		
1098-F23	322,300,000[3]	3621[3]	6278.40				35 to 75	2.4 to 5.2	50	3.4		
1098-F31	356,300,000[1]	4003[1]	6940.72	3-3/8	86	3 in. / DN 80 CL300 RF	2 to 10	0.14 to 0.69	10	0.69		
1098-F32	447,400,000[2]	5026[2]	8715.35				3 to 40	0.21 to 2.7	20	1.4		
1098-F33	669,500,000[3]	7521[3]	13,041.86				35 to 75	2.4 to 5.2	50	3.4		
1098-F41	551,300,000[4]	6193[4]	10,739.32	4-3/8	111	4 in. / DN 100 CL300 RF	2 to 10	0.14 to 0.69	10	0.69		
1098-F42	693,500,000[4]	7791[4]	13,509.38				3 to 40	0.21 to 2.7	20	1.4		
1098-F43	1,035,500,000[3]	11,633[3]	20,171.54				35 to 75	2.4 to 5.2	50	3.4		

NOTE: Additional spring ranges and body styles are available. Ask your LPG Equipment Distributor for more information.
1. Capacity based on 30 psig / 2.1 bar inlet pressure and 15 psig / 1.0 bar setpoint.
2. Capacity based on 40 psig / 2.8 bar inlet pressure and 20 psig / 1.4 bar setpoint.
3. Capacity based on 75 psig / 5.2 bar inlet pressure and 50 psig / 3.4 bar setpoint.
4. Capacity based on 25 psig / 1.7 bar inlet pressure greater than outlet pressure setting.

Commercial Low-Pressure Regulators

Regulators

FISHER



TYPE CS200

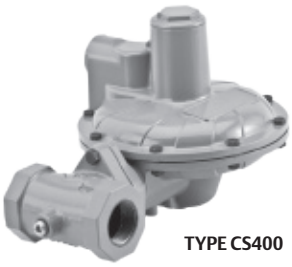

TYPE CS400



TYPE CS800

Emerson has a wide range of low-pressure regulators to meet almost any commercial or industrial application. For ease of reference, only the most popular commercial and industrial regulators are shown on this page. Other orifice sizes, body sizes and outlet pressure ranges are available. See the product guides on pages 36 and 38. The Commercial Service (CS) Regulator Series have a temperature rating of -20 to 160°F / -29 to 71°C, but have passed Fisher™ internal testing for lockup, relief start-to-discharge and reseal down to -40°F / -40°C.

Note: Because of various spring ranges and orifice sizes, all commercial and industrial regulators should be individually sized for the particular installation. Consult specific product bulletins for maximum pressures ratings. Contact your local LPG Equipment Distributor for assistance.

Type CS400 – The Type CS400 is a medium capacity low-pressure, direct-operated regulator designed for loads up to 7,800,000 BTU per hour / 88 SCMH, ideal for installations at schools, bakeries and many other commercial/industrial applications. Available in 1-1/4, 1-1/2 and 2 in. body sizes with spring ranges from 4.5 in. w.c. to 5.5 psig / 11 mbar to 0.38 bar.

Type CS200 – The Type CS200 is a medium capacity low-pressure, direct-operated regulator designed for loads up to 3,800,000 BTU per hour / 44 SCMH, ideal for installations on smaller commercial/industrial applications. Available in 3/4, 1 and 1-1/4 in. body sizes with spring ranges from 3.5 in. w.c. to 2 psig / 9 mbar to 0.14 bar.

Flanged Bodies – The Types CS400 and CS800 are available with a flanged body. Flanges are available in 2 in. / DN 50 body size and CL125 FF end connection.

Type CS800 – The Type CS800 is a direct-operated, spring-loaded regulator which has been engineered for low-pressure commercial service applications. This regulator can accommodate up to 21,600,000 BTU per hour / 243 SCMH of flow capacity and is available in 1-1/2 and 2 in. body sizes with 8 in. w.c. to 5.5 psig / 20 mbar to 0.38 bar pressure ranges.

Note: Types CS200, CS400 and CS800 regulators should be installed with additional/external overpressure protection. These units when installed as part of a two-stage system in fixed piping serving 14 in. w.c. / 35 mbar appliance systems require additional overpressure protection to make the system compliant with NFPA 58 requirements for a two-stage system. Please consult with your LPG Equipment Distributor for more information.

Low-Pressure Commercial Regulators

TYPE	CAPACITIES (PROPANE)[1]			ORIFICE SIZE		INLET AND OUTLET CONNECTION, IN.	OUTLET PRESSURE RANGE		OUTLET PRESSURE SETTING		MAXIMUM OPERATING INLET PRESSURE	
	BTU / hr	SCMH	kg/hr	In.	mm		psig	bar	psig	bar	psig	bar
CS200IR-6EC1	2,500,000	28	48.7	1/2	13	3/4 FNPT	10 to 14 in. w.c.	25 to 35 mbar	11 in. w.c.	27 mbar	40	2.8
CS200IR-6EC3	3,800,000	43	74.02			1 FNPT						
CS200IR-6EC6	3,900,000	44	75.97			1-1/4 FNPT						
CS400IR-8EC6	6,800,000	76	132.46	3/4	19.1	1-1/4 FNPT					20	1.4
CS400IR-8EC7	7,600,000	85	148.05			1-1/2 FNPT						
CS400IR-8EC8	7,600,000	85	148.05			2 FNPT						
CS800IR-8CC7	10,460,000	118	203.76	1	25.4	1-1/2 FNPT	8 to 12 in. w.c.	20 to 30 mbar			30	2.1
CS800IR-8CC8	21,809,000	245	424.84			2 FNPT						
CS200IR-6HC1	3,760,000	42	73.24	1/2	13	3/4 FNPT	1 to 2	0.06 to 0.14	2	0.14	40	2.8
CS200IR-6HC3	4,780,000	54	93.11			1 FNPT						
CS200IR-6HC6	5,327,000	60	103.77			1-1/4 FNPT						
CS400IR-8HC6	9,715,000	109	189.25	3/4	19.1	1-1/4 FNPT					20	1.4
CS400IR-8HC7	10,500,000	118	204.54			1-1/2 FNPT						
CS400IR-8HC8	8,775,000	99	170.94			2 FNPT						
CS820IR-8FC7	15,011,000	169	292.41	1	25.4	1-1/2 FNPT	1 to 2.5	0.06 to 0.17			30	2.1
CS820IR-8FC8	21,436,000	241	417.57			2 FNPT						
CS400IR-8IC6	7,365,000	83	143.47	3/4	19.1	1-1/4 FNPT	2 to 5.5	0.14 to 0.38	5	0.35	20	1.4
CS400IR-8IC7	6,895,000	77	134.31			1-1/2 FNPT						
CS400IR-8IC8	7,365,000[2]	83[2]	143.47			2 FNPT						
CS820IR-8HC7	15,262,000	171	297.3	1	25.4	1-1/2 FNPT	2.5 to 5.5	0.17 to 0.38			30	2.1
CS820IR-8HC8	16,532,000	186	322.04			2 FNPT						

1. Capacities are based on 10 psig / 0.69 bar and 2 in. w.c. / 5 mbar droop.
2. Capacities are based on 10 psig / 0.69 bar and 20% droop.

NOTE: Additional combinations of body sizes, spring ranges and orifice sizes are available. See guides on the next page. Consult your LPG Equipment distributor for more information.

EMERSON

Type CS200 Selection Guide

BASE		SENSING		RELIEF		ORIFICE		REGULATOR SETPOINT		BODY OPTION	
CODE	DESCRIPTION	CODE	DESCRIPTION	CODE	DESCRIPTION	CODE	SIZE In. / mm	CODE	In. w.c. / mbar	CODE	DESCRIPTION
CS200	Basic	I	Internal	N	None	1	1/8 / 3.2	A	3.5 to 5 / 9 to 12	C1	3/4 in. FNPT, Cast Iron
				R	Internal	2	3/16 / 4.8	B	4.5 to 6.5 / 11 to 16	C3	1 in. FNPT, Cast Iron
						3	1/4 / 6.4	C	6 to 8 / 15 to 20	C6	1-1/4 in. FNPT, Cast Iron
						5	3/8 / 9.5	D	7.5 to 11 / 19 to 27		
						6	1/2 / 13	E	10 to 14 / 25 to 35		
								F	12 to 19 / 30 to 47		
								G	18 to 1 psig / 45 mbar to 0.06 bar		
								H	1 to 2 psig / 0.06 to 0.13 bar		

Type CS400 Selection Guide

BASE		SENSING		RELIEF		ORIFICE		REGULATOR SETPOINT		BODY OPTION	
CODE	DESCRIPTION	CODE	DESCRIPTION	CODE	DESCRIPTION	CODE	SIZE, In. / mm	CODE	In. w.c. / mbar	CODE	DESCRIPTION
CS400	Basic	I	Internal	N	None	2	3/16 / 4.8	A	3.5 to 5 / 9 to 12	C6	1-1/4 in. FNPT, Cast Iron
		E	External	R	Internal	3	1/4 / 6.4	B	4.5 to 6.5 / 11 to 16	C7	1-1/2 in. FNPT, Cast Iron
				T	Token	5	3/8 / 9.5	C	6 to 8 / 15 to 20	C8	2 in. FNPT, Cast Iron
						6	1/2 / 13	D	7.5 to 11 / 19 to 27	C9	2 in. / DN 50, CL150 FF, Ductile Iron
						8	3/4 / 19	E	10 to 14 / 25 to 35		
								F	12 to 19 / 30 to 47		
								G	18 to 1 psig / 45 mbar to 0.06 bar		
								H	1 to 2 psig / 0.06 to 0.13 bar		
								I	2 to 5.5 psig / 0.14 to 0.38		

Type CS800 Selection Guide

BASE		SENSING		RELIEF		ORIFICE		REGULATOR SETPOINT		BODY OPTION	
CODE	DESCRIPTION	CODE	DESCRIPTION	CODE	DESCRIPTION	CODE	SIZE, In. / mm	CODE[1]	In. w.c. / mbar	CODE	DESCRIPTION
CS800	Basic	I	Internal	N	None	2	1/4 / 6.4	A	3.5 to 6 / 9 to 15	C6	1-1/4 in. FNPT, Gray Iron
CS820	High Outlet	E	External	R	Internal	3	3/8 / 9.5	B	5.5 to 8.5 / 11 to 16	C7	1-1/2 in. FNPT, Gray Iron
				T	Token	4	1/2 / 13	C	8 to 12 / 15 to 20	C8	2 in. FNPT, Gray Iron
				Q	High Capacity	6	3/4 / 19.1	D	10 to 16 / 25 to 40	C9	2 in. / DN 50, CL125 FF, Gray Iron
						8	1 / 25	E	14 to 30 / 25 to 75	D11	2 in. / DN 50, CL150 FF, Ductile Iron
						9	1-3/8 / 35	F	1 to 2.5 psig / 0.06 to 0.17 bar		
								G	1.5 to 3.5 / 0.10 to 0.24 bar		
								H	2.5 to 5.5 / 0.17 to 0.38 bar		

1. Code A to E only applies to Type CS800. Code F to H only applies to Type CS820.

Type CS403 with Integral True-Monitor™ Protection

1-1/4 in. FNPT to 2 in. FNPT Body Sizes
(2 in. / DN 50, CL150 Flange Available)
7.65 to 8.44M BTU per hour / 85.9 to 94.8 SCMH / 149.0 to 164.4 kg/hr
Internal Registration

Type CS403: Combines operation of a conventional two-regulator wide-open monitor set into one body. During normal operation, the monitor is in a wide open state at a setpoint higher than the primary regulator. If the downstream pressure should rise due to loss of control by the primary regulator, the integral monitor will assume control and regulate the flow to the downstream system.

See Selection Guide on the next page for available options.

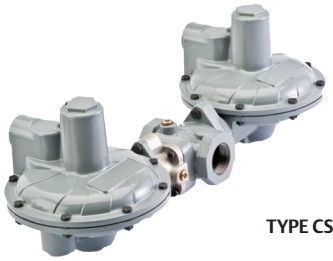

TYPE CS403

PRIMARY SETPOINT	MONITOR SETPOINT	MONITOR SPRING RANGE
In. w.c. / mbar	In. w.c. / mbar	Spring Range
11 / 27	21 / 52	16 to 23 in. w.c. / 40 to 57 mbar
2 psig / 0.14 bar	2.5 psig / 0.17 bar	1.5 to 2.5 psig / 0.10 to 0.17 bar
5 psig / 0.35 bar	6 psig / 0.41 bar	4 to 7.5 psig / 0.28 to 0.52 bar

Type CS404 with Integral Slam shut

1-1/4 in. FNPT to 2 in. FNPT Body Sizes
(2 in. / DN 50, CL150 Flange Available)
7.65 to 8.44M BTU per hour / 85.9 to 94.8 SCMH / 149.0 to 164.4 kg/hr
Internal Registration

Type CS404: Integrates a fast acting shutoff device that provides overpressure shutoff (OPSO) or over/underpressure shutoff (UPSO/OPSO) protection by completely shutting off the flow of gas to the downstream system. The Slam Shut operates independently of the main regulator and does not affect normal operation unless the downstream pressure fluctuates outside of the desired ranges.

See Selection Guide on the next page for available options.

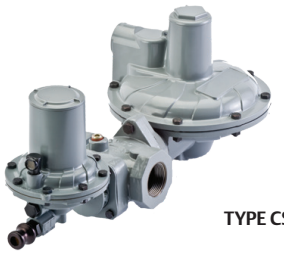

TYPE CS404

PRIMARY SETPOINT	SLAM-SHUT SETPOINT	
	OPSO	UPSO - OPSO
In. w.c. / mbar	In. w.c. / mbar	In. w.c. / mbar
7 / 17	17 / 42	- - - -
11 / 27	19 / 47	6.3 / 16 - 25 / 62
14 / 35	30 / 75	8.8 / 22 - 28 / 70
1 psig / 0.07 bar	1.9 psig / 0.13 bar	16 / 40 - 1.9 psig / 0.13 bar
2 psig / 0.14 bar	3.3 psig / 0.23 bar	1 psig / 0.07 bar - 3.2 psig / 0.22 bar
5 psig / 0.35 bar	6.7 psig / 0.46 bar	2.9 psig / 0.20 bar - 7.5 psig / 0.52 bar

Types CS803 and CS823 with Integral True-Monitor Protection

1-1/2 in. FNPT and 2 in. FNPT Body Sizes
(2 in. / DN 50, CL150 Flange Available)
10.46 to 21.44M BTU per hour / 118 to 241 SCMH / 203.76 to 415.57 kg/hr
Internal Registration

Type CS803: Designed to deliver less than 1 psig, the Type CS803 combines operation of a conventional two-regulator wide-open monitor set into one body. During normal operation, the monitor is in a wide open state at a setpoint higher than the primary regulator. If the downstream pressure should rise due to loss of control by the primary regulator, the integral monitor will assume control and regulate the flow to the downstream system.

Type CS823: Equipped with the same technolgy as the Types CS803 and Type CS823 delivers up to 5.5 psig / 0.38 bar operating pressures.

See Selection Guide on the next page for available options.

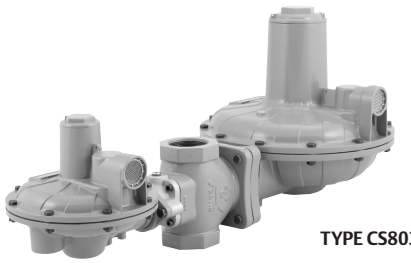

TYPE CS803

PRIMARY SETPOINT	MONITOR SETPOINT	MONITOR SPRING RANGE
In. w.c. / mbar	In. w.c. / mbar	Spring Range
11 / 27	21 / 52	16 to 23 in. w.c. / 40 to 57 mbar
2 psig / 0.14 bar	2.5 psig / 0.17 bar	1.5 to 2.5 psig / 0.10 to 0.17 bar
5 psig / 0.35 bar	6 psig / 0.41 bar	4 to 7.5 psig / 0.28 to 0.52 bar

Type CS403 Selection Guide

BASE		SENSING		RELIEF		ORIFICE		REGULATOR SETPOINT		BODY OPTION	
CODE	DESCRIPTION	CODE	DESCRIPTION	CODE	DESCRIPTION	CODE	SIZE, In. / mm	CODE	Primary - Monitor	CODE	DESCRIPTION
CS403	Integral Monitor	I	Internal	N	None	2	3/16 / 4.8	D	11 in. w.c. / 27 mbar - 1 psig / 68.9 mbar	D2	1-1/4 in. FNPT, Ductile Iron
		E	External	T	Token	3	1/4 / 6.4	H	2 psig / 0.14 bar - 2.5 psig / 0.17 bar	D3	1-1/2 in. FNPT, Ductile Iron
						5	3/8 / 9.5	L	5 psig / 0.35 bar - 6 psig / 0.41 bar	D4	2 in. FNPT, Ductile Iron
						6	1/2 / 13			D9	2 in. / DN 50, CL125 FF, Ductile Iron
						8	3/4 / 19				

Type CS404 Selection Guide

BASE		SENSING		RELIEF		ORIFICE		REGULATOR SETPOINT		BODY OPTION	
CODE	DESCRIPTION	CODE	DESCRIPTION	CODE	DESCRIPTION	CODE	SIZE, In. / mm	CODE	Primary - Slam shut	CODE	DESCRIPTION
CS404	Integrated Slam shut	I	Internal	N	None	2	3/16 / 4.8	D	11 in. w.c. / 27 mbar - 19 in. w.c. / 47 mbar	D2	1-1/4 in. FNPT, Ductile Iron
		E	External	T	Token	3	1/4 / 6.4	K	2 psig / 0.14 bar - 3.3 psig / 0.23 bar	D3	1-1/2 in. FNPT, Ductile Iron
						5	3/8 / 9.5	N	5 psig / 0.35 bar - 6.7 psig / 0.46 bar	D4	2 in. FNPT, Ductile Iron
						6	1/2 / 13	V*	11 in. w.c. / 27 mbar - 6.3 in. w.c. / 16 mbar - 25 in. w.c. / 62 mbar	D9	2 in. / DN 50, CL125 FF, Ductile Iron
						8	3/4 / 19	AB*	2 psig / 0.14 bar - 1 psig / 0.06 bar - 3.2 psig / 0.22 bar		
								AE*	5 psig/ 0.35 bar - 2.9 psig / 0.2 bar - 7.5 psig / 0.52 bar		
								* set pressures for: Primary - Underpressure - Overpressure. Units are in psig / bar			

Types CS803 and CS823 Selection Guide

BASE		SENSING		RELIEF		ORIFICE		REGULATOR SETPOINT		BODY OPTION	
CODE	DESCRIPTION	CODE	DESCRIPTION	CODE	DESCRIPTION	CODE	SIZE In. / mm	CODE	Primary - Monitor	CODE	DESCRIPTION
CS803	Integral Monitor, in. w.c.	I	Internal	N	None	2	1/4 / 6.4	D	11 in. w.c. / 27 mbar - 1 psig / 0.07 bar	D3	1 1/2 in. FNPT, Ductile Iron
CS823	Integral Monitor, psig	E	External	T	Token	3	3/8 / 9.5	H	2 psig / 0.14 bar - 3 psig / 0.21 bar	D4	2 in. FNPT, Ductile Iron
						5	1/2 / 13	L	5 psig / 0.35 bar - 7 psig / 0.48 bar	D9	2 in. CL125 FF/ CL150 FF Cast Iron
						6	3/4 19				
						8	1 / 25				

Industrial Service Low-Pressure Regulators

Regulators

FISHER



TYPE 133H
OR 133L



TYPE 299H

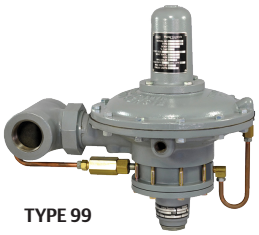

TYPE 99

Emerson has a wide range of low-pressure regulators to meet almost any commercial or industrial application. For ease of reference, only the most popular commercial and industrial regulators are shown on this page. Other orifice sizes, body sizes and outlet pressure ranges are available.

Note: Because of various spring ranges and orifice sizes, all commercial and industrial regulators should be individually sized for the particular installation. Consult specific product bulletins for maximum pressures ratings. Contact your local LPG Equipment Distributor for assistance.

Type 299H – A high capacity pilot-operated regulator. Incorporates a lightweight design (21 lbs / 10 kg) with dependable operation. With a capacity up to 38,000 000 BTU per hour / 428 SCMH, the Type 299H is ideal for applications from large commercial sites to smaller multi-dwelling establishments. The unit comes with a 1-1/2 or 2 in. cast iron body with internal or external registration. Internal registration allows easy installation while external registration provides higher accuracy. 2 in. / DN 50 flanged body or steel body material also available. Alternate outlet settings from 3.5 in. w.c. to 60 psig / 9 mbar to 4.1 bar are available. Temperature ratings for the Type 299H is -20 to 150°F / -29 to 66°C. **The Type 299H has maximum inlet pressure rating of 150 psig / 10 bar so it cannot be used as a First-Stage regulator.**

Type 99 – Pilot-operated unit keeps outlet pressure constant despite varying flow rates and inlet pressures. Designed to handle loads up to 63,250,000 BTU per hour / 712 SCMH, the Type 99L is ideal for multiple customer installations. The unique pilot design, with fast opening and closing operation, makes the Type 99L ideal for large industrial boiler applications. The Type 99L can be used for low pressure. A downstream control line is required. Temperature ratings for the Type 99 is -20 to 160°F / -29 to 82°C.

133 Series – Direct-operated Second-Stage regulator ideal for large industrial applications with loads up to 70,875,000 BTU per hour / 798 SCMH. The unit can be used for either low pressure or pounds service. Maximum inlet pressure is 60 psig / 4.1 bar and a downstream control line is required. The 133 Series has a temperature rating of -20 to 150°F / -29 to 66°C.

Low-Pressure Commercial/Industrial Regulators

TYPE	CAPACITIES (PROPANE)			ORIFICE SIZE		INLET AND OUTLET CONNECTION, IN.	OUTLET PRESSURE RANGE		OUTLET PRESSURE SETTING		MAXIMUM OPERATING INLET PRESSURE	
	BTU / hr	SCMH	kg/hr	In.	mm		psig	bar	psig	bar	psig	bar
299H-101	13,100,000[1]	148[1]	255.19	3/4	19	1-1/2 FNPT	9 to 20 in. w.c.	22 to 50 mbar	11 in. w.c.	27 mbar	150	10.3
299H-102	19,700,000[1]	222[1]	383.76			2 FNPT						
299H-103	23,300,000[2]	262[2]	453.88			1-1/2 FNPT	6 to 16	0.41 to 1.1	10	0.69		
299H-104	38,000,000[2]	428[2]	740.24			2 FNPT						
299H-105	20,400,000[3]	230[3]	397.39			1-1/2 FNPT	9 to 20 in. w.c.	22 to 50 mbar	11 in. w.c.	27 mbar		
299H-106						2 FNPT						
299H-107	38,000,000[4]	428[4]	740.24			1-1/2 FNPT	6 to 16	0.41 to 1.1	10	0.69		
299H-108						2 FNPT						
99-501P	49,000,000[6]	552[6]	954.52	1-1/8	29	2 FNPT	7 in. w.c. to 2 psig	17 mbar to 0.14 bar	1	69 mbar	150	10.3
99-502P	50,600,000[6]	570[6]	985.69				1 to 5	69 mbar to 0.34 bar	5	0.34		
99-503P	61,650,000[6]	694[6]	1200.94				2 to 10	0.14 to 0.69	10	0.69		
99-504P	63,250,000[6]	712[6]	1232.11				5 to 15	0.34 to 1.0	15	1.0		
133L-4	70,875,000[3]	798[3]	1380.65	2	51		8.5 to 18 in. w.c.	21 to 45 mbar	14 in. w.c.	35 mbar	60	4.1
133H-1	66,150,000[5]	745[5]	1288.60				1.5 to 3	0.10 to 0.21	3	0.21		
133H-3	115,958,000[6]	1305[6]	2258.86				5 to 10	0.34 to 0.69	10	0.69		

1. Capacity based on inlet pressure of 10 psig / 0.69 bar, Internal Registration and 2 in. w.c. / 5 mbar droop.
2. Capacity based on inlet pressure of 20 psig / 1.4 bar higher than outlet pressure, Internal Registration and 20% droop.
3. Capacity based on inlet pressure of 10 psig / 0.69 bar, External Registration and 2 in. w.c. / 5 mbar droop.
4. Capacity based on inlet pressure of 20 psig / 1.4 bar higher than outlet pressure, External Registration and 2 in. w.c. / 5 mbar droop.
5. Capacity based on inlet pressure of 10 psig / 0.69 bar, External Registration and 20% droop.
6. Capacity based on inlet pressure of 20 psig / 1.4 bar higher than outlet pressure, External Registration and 20% droop.

NOTE: Additional spring ranges and body styles are available. Ask your LPG Equipment Distributor for more information.

See Additional Product Listings for the full product range on pages 90 to 99.

EMERSON

Commercial Automatic Changeover Regulators

Designed for large capacity multi-cylinder or tank installations, these regulators are used on applications such as bakeries, motels, restaurants and grain dryers. The manifold portion of the assembly consists of two 64 Series regulators and a direct mounted 803 Series indicator. Temperature rating for the Type 64SR-122 is -20 to 150°F / -29 to 66°C.

Type 64SR-122 – For high pressure (pounds-to-pounds) service with the outlet pressure supplied by a Type 64SR that has internal relief protection.



TYPE 64SR-122

Commercial Automatic Changeover Regulators					
TYPE	CAPACITIES IN BTU per hour / SCMH / KG/HR PROPANE[1]	INLET CONNECTION, IN.	OUTLET CONNECTION, IN.	OUTLET PRESSURE SETTING, psig / bar	OUTLET ADJUSTMENT RANGE, psig / bar
64SR-122	1,210,000 / 13.6 / 23.57	1/2 FNPT	1/2 FNPT	10 / 0.69	5 to 20 / 0.34 to 1.4

Changeover Manifold Assemblies

Type R130-21 – Composed of two Type 67C regulators and a special 0 to 60 psig / 0 to 4.1 bar pressure gauge, the Type R130 delivers a 45 psig / 3.1 bar outlet pressure on supply and 30 psig / 2.1 bar on reserve. The gauge, which serves as the changeover indicator, is painted red from 0 to 35 psig / 0 to 2.4 bar. When the dial reads in the 0 to 35 psig / 0 to 2.4 bar range, it indicates that the manifold has switched from the supply to the reserve cylinder. The Type R130-21 has a temperature rating of -20 to 160°F / -29 to 71°C.

Type 749B-21 – Large capacity changeover manifold for commercial and industrial applications. It consists of two 64 Series regulators and a 803 Series direct indicator. The assembly is used primarily in conjunction with either a Type HSRL or 64SR regulator. The standard outlet setting is 15 psig / 1.0 bar from the supply and 5 psig / 0.34 bar from the reserve. Temperature rating for the Type 749B-21 is -20 to 150°F / -29 to 66°C.

Note: These units are intended for use with Second-Stage regulators and/or separate relief devices which provide overpressure protection required by NFPA 58. Capacity of all these changeover manifolds is dependent on the size of the Second-Stage regulator with which they are used. If the manifolds are used as a Final-Stage (pounds-to-pounds), a relief valve is required in the downstream system.



TYPE R130-21

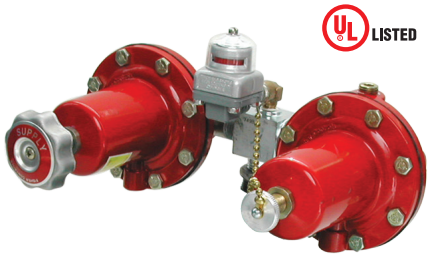

TYPE 749B-21



TYPE 803-21

Remote Indicator

803 Series – give remote visual indication that the supply cylinder is empty and that the regulator is withdrawing gas from the reserve cylinder. The indicator has 360° visibility and is weatherproof.

Type 803-21 – Indicator only

Changeover Manifold Regulators					
TYPE	CAPACITIES IN BTU per hour / SCMH / KG/HR PROPANE[1]	INLET CONNECTION, IN.	OUTLET CONNECTION, IN.	OUTLET PRESSURE SETTING	
				Supply Setting, psig / bar	Reserve Setting, psig / bar
R130-21	1,475,000 / 16.6 / 28.73	1/4 FNPT	1/4 FNPT	45 / 3.1	30 / 2.1
749B-21	1,500,000 / 16.9 / 29.22	1/2 FNPT	1/2 FNPT	15 / 1.0	5 / 0.34
1. Based on 100 psig / 6.9 bar inlet, reserve setting.					

Monitor Overpressure Protection

Regulators

FISHER

Monitoring is overpressure control by containment. When the working pressure reducing valve ceases to control the pressure, a second regulator installed in series, which has been sensing the downstream pressure, goes into operation to maintain the downstream pressure at a slightly higher than normal pressure. The monitoring concept is gaining in popularity, especially in low-pressure systems, because very accurate relay points permit reasonably close settings of the working and monitoring regulators.

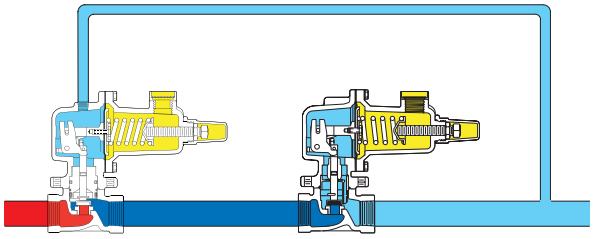

TYPE 627M (DIRECT-OPERATED) MONITOR

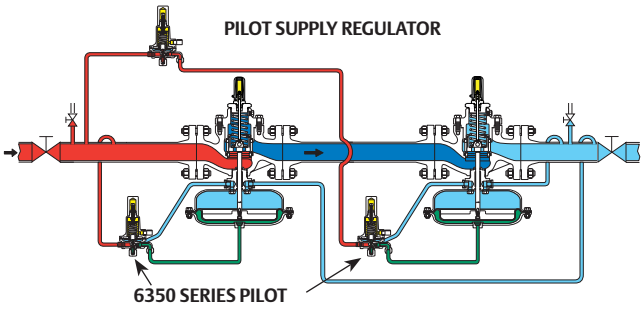

TYPE 1098H (PILOT-OPERATED) MONITOR

INLET PRESSURE
OUTLET PRESSURE
LOADING PRESSURE
ATMOSPHERIC PRESSURE
INTERMEDIATE PRESSURE

The major advantage is that there is no venting to atmosphere. During an overpressure situation, monitoring keeps the customer on line and keeps the downstream pressure relatively close to the setpoint of the working regulator. Testing is relatively easy and safe. To perform a periodic test on a monitor, increase the outlet set pressure of the working device and watch the pressure to determine if the monitor takes over.

When selecting regulators for use in a monitor system, the upstream regulator must have a control line. When determining the capacity of a monitor system you will get approximately 70% to 73% of the capacity of a single regulator when using the same regulator for both regulators in the system.

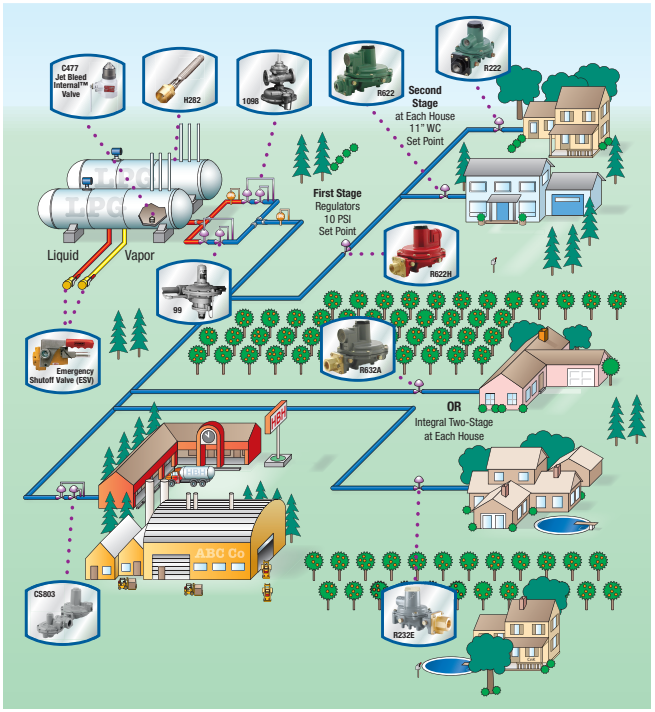

COMMUNITY SYSTEM MAP

Fisher™ offers a wide variety of products for monitor applications. Provided for your reference below is a list of commonly used regulators for various capacity requirements. Note that pilot-operated regulators may be used in conjunction with direct-operated regulators in monitor applications, depending on the application requirement. Please call your local LPG Equipment Distributor to review your monitor requirements.

Typical Wide-Open Monitor System

OPERATING REGULATOR	ORIFICE SIZE		BODY SIZE, IN.	MONITOR REGULATOR	ORIFICE SIZE		BODY SIZE, IN.	REGULATING CAPACITY(1)		
	In.	mm			In.	mm		BTU/hr	SCMH	kg/hr
Type 627-5810	3/8	9.53	3/4 NPT	Type 627M-421	1/2	13	3/4 NPT	5,750,000	64.6	112.01
Type 627-6210	1/2	13	3/4 NPT	Type 627M-421			3/4 NPT	7,050,000	79.2	137.33
Type 627-7710			1 NPT	Type 627M-471			1 NPT			
Type 630-104/78			2 NPT	Type 627M-267			2 NPT	8,400,000	94.4	163.63
Type 630-104/78			2 NPT	Type 99M-504PH	1-1/8	28.6	2 NPT	13,500,000	152	262.98
Type 99-504PH	1-1/8	28.6	2 NPT	Type 99M-504PH			2 NPT	42,650,000	479	830.82
Type 99-504PH			2 NPT	Type 1098H	2-3/8	60.3	2 NPT	54,500,000	612	1061.66
Type 1098	2-3/8	60.3	2 NPT	Type 1098H			2 NPT	136,900,000	1538	2666.81
Type 1098			3 NPT	Type 1098H	3-3/8	85.7	3 NPT	283,700,000	3187	5526.48
Type 1098			4 NPT	Type 1098H	4-3/8	111	4 NPT	437,800,000	4918	8528.34

1. Capacities are based on 30 psig / 2.1 bar in and 8 psig / 0.55 bar out.

EMERSON

Relief Valve for Liquid or Vapor Service

Type MR98H – is a direct-operated relief valve for use on relief and backpressure applications involving large LPG pumping systems and vaporizers. Internal pressure registration eliminates the need for a control line. Body materials are available in Gray Cast Iron, Steel or Stainless Steel. It is available with Nitrile (NBR) gaskets in sizes from 1/4 in. to 2 in. / 6.35 to 50.8 mm. Relief pressure ranges from 15 to 200 psi / 1.03 to 13.8 bar. Temperature ratings are -40 to 180°F / -40 to 82°C for CI and SST and -20 to 180°F / -29 to 82°C for Steel. Available with: gauge port on inlet, gauge port on outlet and Fluorocarbon (FKM) elastomers.

Type MR98HH – Same features as above but relief pressure range is 150 to 375 psig / 10.3 to 25.9 bar.



TYPE MR98H



TYPE MR98HH

Liquid Service Relief Valves

TYPE	BODY SIZE, IN.	RELIEF PRESSURE RANGE		RELIEF PRESSURE SETTING		PROPANE RELIEF CAPACITY GPM / l/min AT FOLLOWING PRESSURE BUILD-UP OVER RELIEF SETTING									
						5 psig / 0.34 bar		10 psig / 0.69 bar		20 psig / 1.4 bar		30 psig / 2.1 bar		50 psig / 3.4 bar	
		psig	bar	psig	bar	GPM	l/min	GPM	l/min	GPM	l/min	GPM	l/min	GPM	l/min
MR98H-13	1/2 FNPT	25 to 75	1.7 to 5.2	50	3.4	16.9	66.1	26.8	103.4	38.0	140.8	40.8	154.9	49.3	184.5
MR98H-22	3/4 FNPT	70 to 140	4.8 to 9.7	100	6.9	32.4	121.0	53.5	201.4	78.9	300.0	87.3	331.0	104.2	394.4
MR98H-30	1 FNPT	70 to 140	4.8 to 9.7	100	6.9	32.4	121.0	53.5	201.4	78.9	300.0	87.3	331.0	104.2	394.4
MR98H-31	1 FNPT	130 to 200	9.0 to 13.8	175	12.1	29.6	112.4	47.9	178.9	77.5	291.5	90.1	342.3	118.3	446.5
MR98HH-19	1 FNPT	150 to 375	10.3 to 25.9	250	17.2	27.6	104.4	37.7	142.3	61.7	233.8	83.4	315.5	113.0	426.8

Vapor Relief Valves

Type 1805 – relief valve is designed for installation between the First and Second-Stage regulators or in the downstream line from a high-pressure regulator used for a Final-Stage service where high line pressures are allowed. Available in 1 or 2 in. valve bodies with a temperature rating of -20 to 150°F / -29 to 66°C.

Type 289H – relief valve is designed for installation downstream of larger high-pressure or low-pressure regulators in most all relief applications. The larger diaphragm in this relief valve provides extremely sensitive operation, with a temperature rating of -20 to 150°F / -29 to 66°C.

Types 1808 and 1808A – pilot-operated relief valve is designed to protect large high-pressure regulators by offering extremely high relief capacities compared to the Type 289H. The Type 1808 has a temperature rating of -20 to 180°F / -29 to 82°C.



TYPE 1805



TYPE 289H



TYPE 1808

Vapor Relief Valves

TYPE	BODY SIZE, IN.	RELIEF START-TO-DISCHARGE		SPRING RANGE		PRESSURE BUILDUP OVER SET PRESSURE		CAPACITY (AIR)	
		psig	bar	psig	bar	psig	bar	SCFH	Nm^3/h
1805-18P	1 FNPT	15	1.03	5 to 35	0.34 to 2.41	15	1.03	6160 at 30 psig	161 at 2.07 bar
1805-19P	1 FNPT	40	2.75	10 to 60	0.69 to 4.1	15	1.03	3120 at 55 psig	83.62 at 3.79 bar
1805-51P	2 FNPT	15	1.03	5 to 20	0.34 to 1.38	15	1.03	28,500 at 30 psig	748 at 2.07 bar
1805-52P	2 FNPT	40	2.75	10 to 50	0.69 to 3.4	15	1.03	14245 at 55 psig	381.77 at 3.79 bar
1808A-61	2 FNPT, Angle	20	1.4	15 to 40	1.03 to 2.76	10	0.69	78,230 at 30 psig	2053 at 2.07 bar
289H-42	1 FNPT	15	1.03	4 to 15	0.28 to 1.03	15	1.03	33,880 at 30 psig	889 at 2.07 bar
289H-2	2 FNPT	24 in. w.c.	60 mbar	1/2 to 2-1/4	34 to 155 mbar	1.13	78 mbar	15,400 at 2 psig	38 at 138 mbar

NOTE: Some regulators will require more than one relief valve. Consult your local Fisher™ LPG Distributor for proper relief valve sizing.



TYPE Y602-1 (UMBRELLA TYPE)



TYPE Y602-13 (ANGLE TYPE)

Vent Assemblies

Attached directly to the regulator vent connection to a regulator vent line, vent assemblies should be pointed downward on outdoor installations to avoid moisture build-up in the regulator spring case. Units with stabilizer assembly are intended for regulators with stability problems. The stabilizer gives a restricted breathing rate under normal conditions, opening for rapid discharge when necessary. Screen material is Monel® with integral plastic screen for all except Type Y602-12.

Vent Assemblies

TYPE		SIZE	STABILIZER
Umbrella Type	Angle Type		
----	Y602-13	1/4 in. FNPT	No
----	Y602-14		Yes
Y602-1	----	1/4 in. MNPT	No
Y602-2	----		Yes
Y602-3	----	3/8 in. O.D. Tubing (Flare Connection)	No
Y602-4	----		Yes
Y602-12	----	1/4 in. MNPT	No
----	Y602-5	3/8 in. FNPT	No
----	Y602-6		Yes
----	Y602-7	1/2 in. FNPT	No
----	Y602-8		Yes
----	Y602-9	3/4 in. FNPT	No
----	Y602-23	3/4 in. MNPT	No
----	Y602-25	1 in. MNPT	No



TYPE 912-101

Small Portable Appliance Regulators

Type 912 – Designed for use on small portable outdoor appliances.

Underwriters Laboratory (UL®) requires horizontally mounted regulators to be installed with vent opening protection to prevent blockage by freezing rain. The 912 Series has a temperature rating of -20 to 160°F / -29 to 71°C.

Appliance Regulators

TYPE	PRESSURE RANGE		OUTLET PRESSURE		Regulator Capacities (Propane)						INLET CONNECTION		OUTLET CONNECTION		ORIFICE SIZE	
	In. w.c.	mbar	In. w.c.	mbar	10 psig, Inlet		25 psig, Inlet		100 psig, Inlet		In.	mm	In.	mm	In.	mm
					BTU/hr	kg/hr	BTU/hr	kg/hr	BTU/hr	kg/hr						
912N-194[1]	3 to 7	7 to 17	5	12	101,000	1.97	151,000	2.94	----	----	1/4	6.4	1/4	6.4	0.073	1.85
912-104	9.25 to 13	23 to 32	11	27	101,000	1.97	270,000	5.26	349,000	6.80	1/4	6.4	1/4	6.4	0.073	1.85
912N-109[1]	5 to 10	12 to 25	7	17	123,000	2.40	232,000	4.52	556,000	10.83	1/4	6.4	3/8	9.5	0.073	1.85
912-101	9.25 to 13	23 to 32	11	27	110,000	2.14	201,000	3.92	494,000	9.62	1/4	6.4	3/8	9.5	0.073	1.85
912-122	9.25 to 13	23 to 32	11	27	110,000	2.14	201,000	3.92	494,000	9.62	1/4	6.4	3/8	9.5	0.073	1.85
912H-108	0.5 to 2.7 psig	0.03 to 0.19 bar	1.5 psig	103	131,000	3.93	202,000	3.92	470,000	9.16	1/4	6.4	3/8	9.5	0.094	2.39

1. Not UL listed.



TYPE P100A



TYPE P100C

Mounting Brackets

Mounting brackets are used to mount regulators securely to the container or to the side of the building.

Mounting Brackets		
REGULATOR TYPE	BRACKET STYLE	
	Triangular	Bowtie
R622, R632, R642 and R622H	P100A	P100C
R122H, R222 and R232	P100A	----
912	P100A	----



TYPE 50-2



TYPE 50P-5



TYPE 50P-2

Test Gauge Assemblies

The 50 Series test gauges are used to check appliance line pressure after the regulator has been installed.

Test Gauge Assemblies				
TYPE	INLET CONNECTION	HOSE	PLASTIC	RANGE, IN. W.C. / mbar
50-2	1/4 in. MNPT	No	No	0 to 35 / 0 to 87
50P-2	Female Hose	Yes	Yes	
50P-5		Yes	No	



TYPE P499



TYPE P500

Adaptor With Screen (Type P499)

Used to convert a 1/4 in. NPT inlet on regulators such as Types 912 and 67C to an inverted flare.

Type P500 Plug

Keeps dirt and foreign material from entering changeover assemblies. 1/4 in. Inverted Flare.

Type P501 Filter Assembly

Intended for the inlet of 67C Series regulators, the Type P501 prevents foreign material from reaching the regulator's valve disc.

Adaptor with Screen	
TYPE	SIZE
P499	1/4 in. Inverted Flare x 1/4 in. MNPT



TYPE J542
BOTTOM CONNECTION



BACK CONNECTION

Pressure Gauges

Fisher™ offers pressure gauges with bottom or back connection for LPG service. The back connection makes a more compact assembly on installations where space is limited. All gauges have a 2 in. / 51 mm diameter face/black Terluran® plastic case. (Except Type J542 with Stainless steel case.)

Pressure Gauges							
PRESSURE GAUGE RANGE, psig / bar							
Connection	Size, in.	0 to 15 / 0 to 1.0	0 to 30 / 0 to 2.1	0 to 60 / 0 to 4.1	0 to 160 / 0 to 11	0 to 300 / 0 to 20.7	0 to 400 / 0 to 27.6
Bottom	1/4	J500	J501	J502	J504	J506	J542[1]
Back	1/4	J510	J511	J512	J514	J516	N/A
1. For LPG or Anhydrous ammonia (NH_3) service.							

Terluran® is a trademark of BASF.

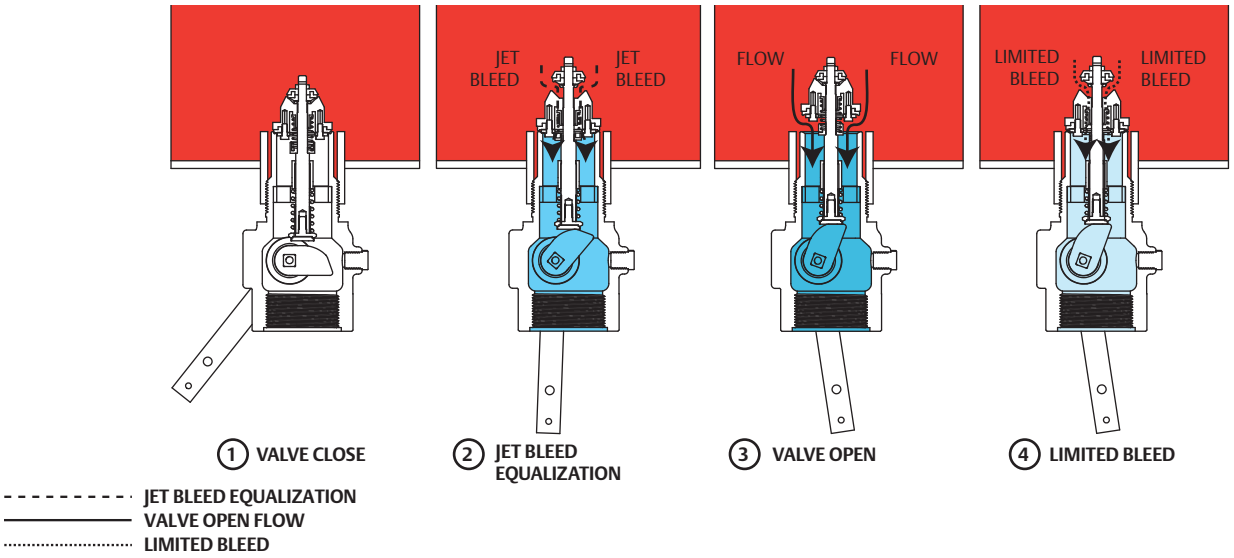

Fisher™ internal valves have gained wide field acceptance for use as primary shutoff valves, excess flow valves and back check valves[1]. Internal valves are installed in the inlets and outlets (liquid or vapor) of pressure vessels and in piping systems to control the flow of LPG and Anhydrous Ammonia (NH_3). The most frequent application is on bobtail and transport truck tanks, but they may also be used on large stationary storage tanks and on in-line installations. The valves can be used in conjunction with or without pumps and compressors.

Features and Benefits

- **Patented rapid equalization bleed area***—provides fast valve response for quick opening by moving the flow area away from the stem and allowing it to flow through the poppet. This not only increases flow rate, but also greatly improves valve cycle life which directly improves expected service life.
- **Unique Serviceability Features***—Removable gland packing, stainless trim parts and poppet designed with integral wrench flat for easy maintenance.
- **Durable Design**—Stainless poppet and stem* interface smoothly for a long wear life.
- **Excess Flow Closure**—Functions when flow exceeds the valves rated capacity or piping is sheared off at the valve.
- **Back Check Feature**—Allows reverse flow, fill with or without actuator device in valve open position.
- **Spring loaded PTFE stub shaft packing**
- **PTFE wear pads and Rulon® Bushings at critical wear points**
- **Manual, Cable or Air Open/Close Control**
- **Thermal Fusible links or plugs melt at 212 to 220°F / 100 to 104°C and allow valve closure in the event of a fire at the valve.**

Principle of Operation

The operational schematic below depicts threaded valves, however flanged styles operate in the same manner. For detailed information, refer to the Instruction Manual provided with the valve.

View #1
The valve is held closed by both tank pressure and the valve's closing spring. There is no leakage past the resilient seats in the poppet to the valve outlet.

View #2
The valve is opened by moving the operating lever to approximately midpoint in its 70° travel. This allows the cam to place the rapid equalization portion of the valve stem in the pilot opening, permitting a larger amount of product to bleed downstream than if the operating lever were moved to the full open position.

View #3
When tank and downstream pressure are nearly equal after a few seconds, the excess flow spring pushes open the main poppet and the operating lever can be moved to the full open position.

If tank pressure is greater than the valve's outlet pressure, the main poppet will remain in the closed position. If valve outlet piping is closed off by other valves, however, product bleeding through the pilot will increase until it nearly equals tank pressure and the main poppet opens. The main poppet will not open if valve outlet piping is not closed off so that the outlet pressure can approach tank pressure.

View #4
Once the main poppet opens, a flow greater than the valve's excess flow spring rating or a sufficient surge in flow forces the main poppet closed against the excess flow spring. The pilot valve allows a small amount of product to bleed, but much less than view # 2 where the rapid equalization portion of the stem is placed in the pilot opening. When the operating lever is moved to the closed position, the valve closes completely and seals tightly (view #1).

*Unique to the Jet Bleed Internal™ Valve Design only.
1. Because of the integral back check function of these valves, selective filling of manifold storage tanks requires the use of additional shutoff valves.



C407 SERIES



C477 SERIES



C471 SERIES



C486 SERIES

Threaded Internal Valves

Emerson offers the widest variety of threaded internal valves in the industry. While their most frequent use is in the liquid and vapor openings of bobtail and transport trucks, the valves can also be used in stationary storage tanks, complying with NFPA 58 requirements. Designed as primary shutoff valves, the units are designed with several features that help control product discharge.

All UL-listed internal valves are suitable for LPG or Anhydrous Ammonia (NH_3) service. Special construction is available for other compressed gases. All threaded internal valves have a compact, one-piece body design. They can be actuated manually, by cable control orwith an air cylinder.

C407-10 Series (1-1/4 in. / DN 32 Body Size) – An excellent valve for vapor return lines on bobtail trucks. Other applications include use as a main valve on small capacity pumping systems, Anhydrous Ammonia (NH_3) nurse tanks and in-line installations.

C477 Series (Straight-Through Body) – Available in 2 and 3 in. end connections. The most compact and economical unit in the Series, the C477 Series has one bottom outlet. The C477 Series can be used on bobtail, transport, stationary tank and in-line installations.

C471 Series (Tee Body) – Available in 2 and 3 in. end connections. This unit is designed with two outlets, bottom and side. The side outlet permits installing horizontal piping immediately adjacent to the tank without the need for extra pipe fittings. Either connection can be used for truck filling or withdrawal. The C471 Series is used primarily on bobtails and transport trucks.

C486 Series (Flange-by-NPT) – Available in 3 in. end connections. This unit was designed with an integrally cast inlet flange to quickly bolt to existing installations that historically required a valve to be threaded into a flange. Outlet is standard 3 in. FNPT.

UL® Approved C400 Series Internal Valves

CONNECTION INLET X OUTLET	TYPE		CLOSING FLOW (PROPANE)[2]				VAPOR CAPACITY (PROPANE)[2]				CLOSING FLOW (NH_3)[2]	
	Straight Body	Tee Body	Half Coupling		Full Coupling		25 psig / 1.7 bar Inlet		100 psig / 6.9 bar Inlet		Half Coupling	
			GPM	l/min	GPM	l/min	SCFH	SCMH	SCFH	SCMH	GPM	l/min
1-1/4 in. MNPT x 1-1/4 in. FNPT	C407-10-04	----	40	152	25	95	7400	210	12,700	360	36	136
	C407-10-05	----	50	189	35	133	9600	272	16,400	464	45	170
	C407-10-08[1]	----	80	303	65	246	15,800	447	27,600	781	72	272
2 in. MNPT x 2 in. FNPT	C477-16-10	C471-16-10	105	397	60	227	26,100	739	45,000	1274	95	360
	C477-16-15	C471-16-15	150	568	80	303	39,400	1116	69,000	1954	136	515
	C477-16-25	C471-16-25	250	946	130	492	----		----		227	859
3 in. MNPT x 3 in. FNPT	C477-24-16	C471-24-16	160	606	120	454	41,100	1164	71,000	2011	145	549
	C477-24-26	C471-24-26	265	1003	230	871	71,800	2033	127,000	3596	239	905
	C477-24-37	C471-24-37	375	1419	320	1211	99,000	2803	178,000	5040	339	1283
	C477-24-46	C471-24-46	460	1741	380	1438	----		----		415	1571
3 in. CL300 RF x 3 in. FNPT	C486-24-16	----	160	606	120	454	41,100	1164	71,000	2011	145	549
	C486-24-26	----	265	1003	230	871	71,800	2033	127,000	3596	240	908
	C486-24-37	----	375	1419	320	1211	99,000	2803	178,000	5040	340	1287
	C486-24-46	----	460	1741	380	1438	----		----		418	1582

NOTE: Includes a factory installed Type P340 / P341 latch.
1. LPG Vapor exceeds UL differential requirement of 15 psid / 1.03 bar d.
2. Closing Flows and Vapor Capacities listed are with valve in "bottom of tank" position. See product bulletins for additional data.

Special Service Threaded Internal Valves

Valves

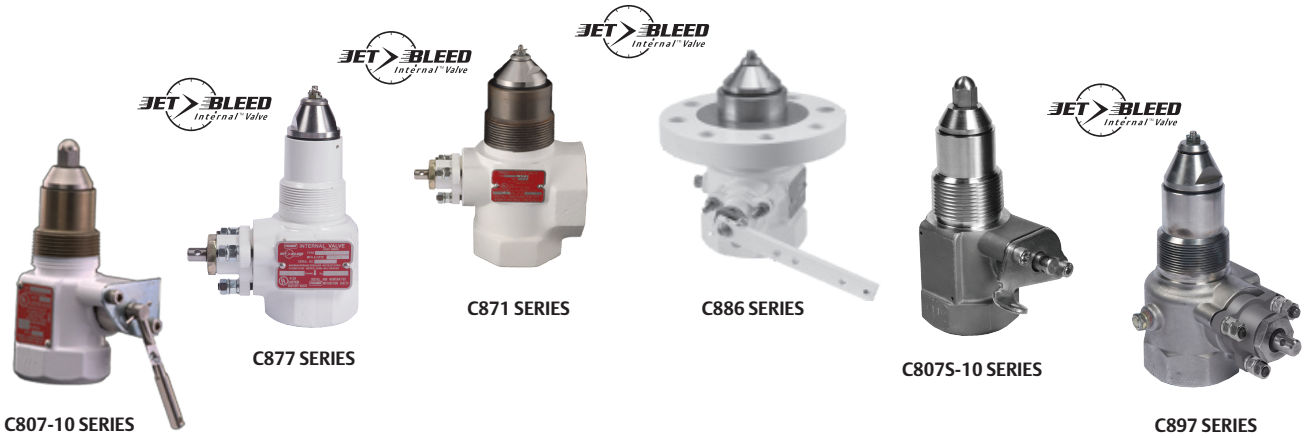

C800 Series Threaded Internal Valves

The Fisher™ C800 Series Internal Valves provide the same primary shutoff and excess flow protection as the C400 Series, but are offered in a wide variety of body materials and elastomeric seals. With industrial process installations spanning the globe, the C800 Series has been the trusted product line for decades.

Specifications

Emerson is the leader in special service conditions and offers a wide selection of metallic and elastomeric components to meet your demands. Every process or special service fluid has unique compatibility properties, pressure ranges and temperature ranges. Please contact your Fisher LPG Equipment distributor to help select the configuration that's best for you.

C800 Series Special Service Internal Valves

CONNECTION INLET X OUTLET	BODY STYLE	TYPE	BODY MATERIAL	ELASTOMER AVAILABLE PER ORDER[3]					
1-1/4 in. MNPT x 1-1/4 in. FNPT	Straight Body	C807-10	Steel	Fluorocarbon (FKM)	Nitrile (NBR)	PTFE	----	----	----
		C807S-10	SST						
2 in. MNPT x 2 in. FNPT	Tee Body	C871-16	Ductile Iron	EPDM	Viton®(1)	Kalrez®(2)	Neoprene (CR)	Nitrile (NBR)	PTFE
	Straight Body	C877-16	Ductile Iron						
		C887-16	Steel						
		C897-16	SST						
3 in. MNPT x 3 in. FNPT	Tee Body	C871-24	Ductile Iron						
	Straight Body	C877-24	Ductile Iron						
		C897-24	SST						
3 in. CL300 RF Flange x 3 in. FNPT	Straight Body	C886-24	Steel						

1. Viton® or Fluorocarbon (FKM) equivalent
2. Kalrez® or Perfluoroelastomer (FFKM) equivalent
3. Additional materials can be sourced upon request. Please contact your Fisher LPG Equipment Distributor for more information.

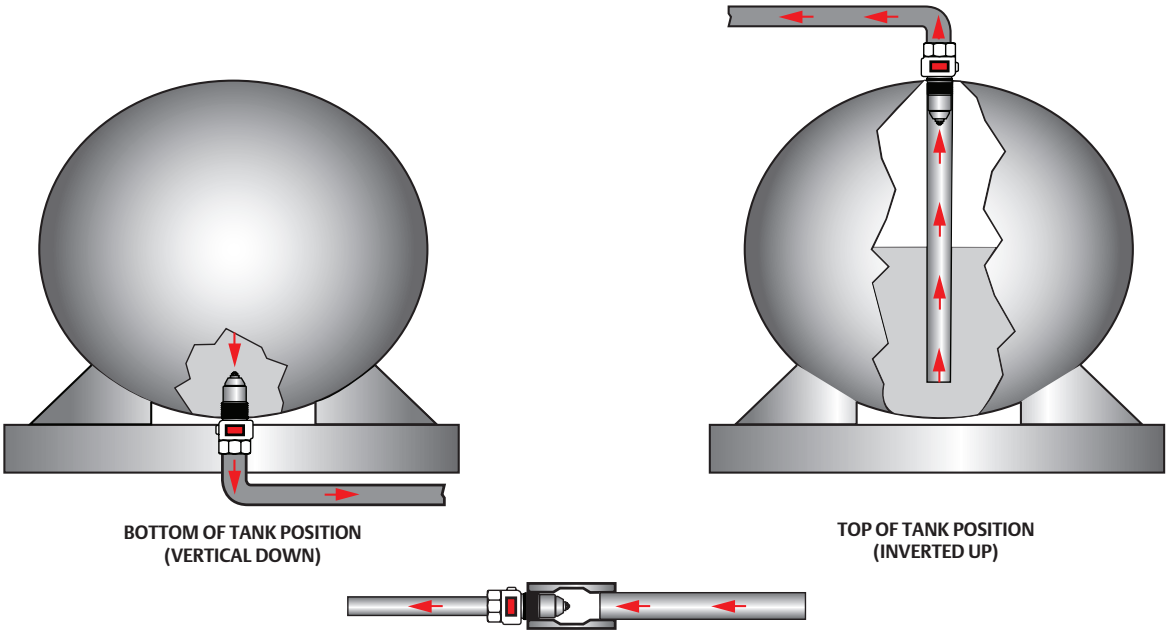

BOTTOM OF TANK POSITION
(VERTICAL DOWN)

TOP OF TANK POSITION
(INVERTED UP)

INTERNAL VALVE TANK POSITIONS

HORIZONTAL POSITION
(REFER BELOW)

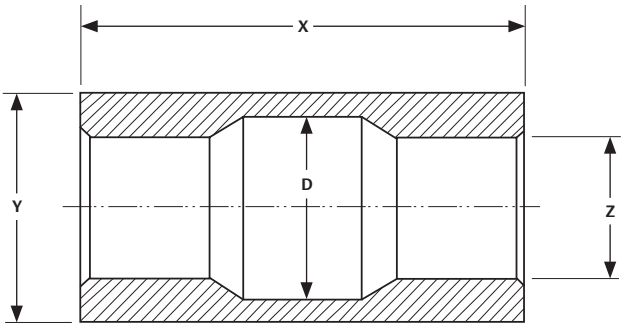

IN-LINE ADAPTOR

In-Line Adaptors (for reference only)*			
Z	DIMENSION, IN. / mm		
	X	Y	D
1-1/4 in. FNPT	4.70 / 119	2.75 / 70	2.05 / 52
2 in. FNPT	6.77 / 172	3.5 / 89	2.80 / 71
3 in. FNPT	7.53 / 191	4.5 / 114	3.80 / 97
* Not for sale.			

Threaded Valve Specifications

Pressure Rating: 400 psig / 27.6 bar WOG
Temperature[1]**:** C470 Series:-20 to 150°F / -29 to 66°C
C800 Series: Contact your Fisher™ LPG Distributor for details
Body: C470 Series: Ductile Iron
C407-10 Series: Cast Steel
C800 Series: Ductile Iron, Steel, SST
Packing: PTFE
Seat Discs: C407-10 and C470 Series: Molded, synthetic rubber
C800 Series: Contact your local LPG Distributor for details
Stub Shaft and Stem: Stainless steel

WARNING

A line break downstream of a pump may not actuate the excess flow valve. If any break occurs in the system or if the excess flow valve closes, the system should be shutdown immediately.

DO NOT USE the excess flow function incorporated into Fisher C Series internal valves or F Series excess flow valves to satisfy the passive shutdown requirement in 49CFR§173.315(n)(2). DO NOT include the excess flow incorporated into Fisher C Series internal valves or F Series excess flow valves in a DCE certification under 49CFR§173.315(n)(2). The cargo tank manufacturer must install some other equipment that satisfies the requirement for passive shutdown capability under 49CFR§173.315(n)(2).

Failure to follow this warning could result in serious personal injury or property damage from fire or explosion in the event of an unintentional release of product during an unload operation.

Type C477/471-24 "Bottom of Tank" Position Flow Curve, Half Coupling

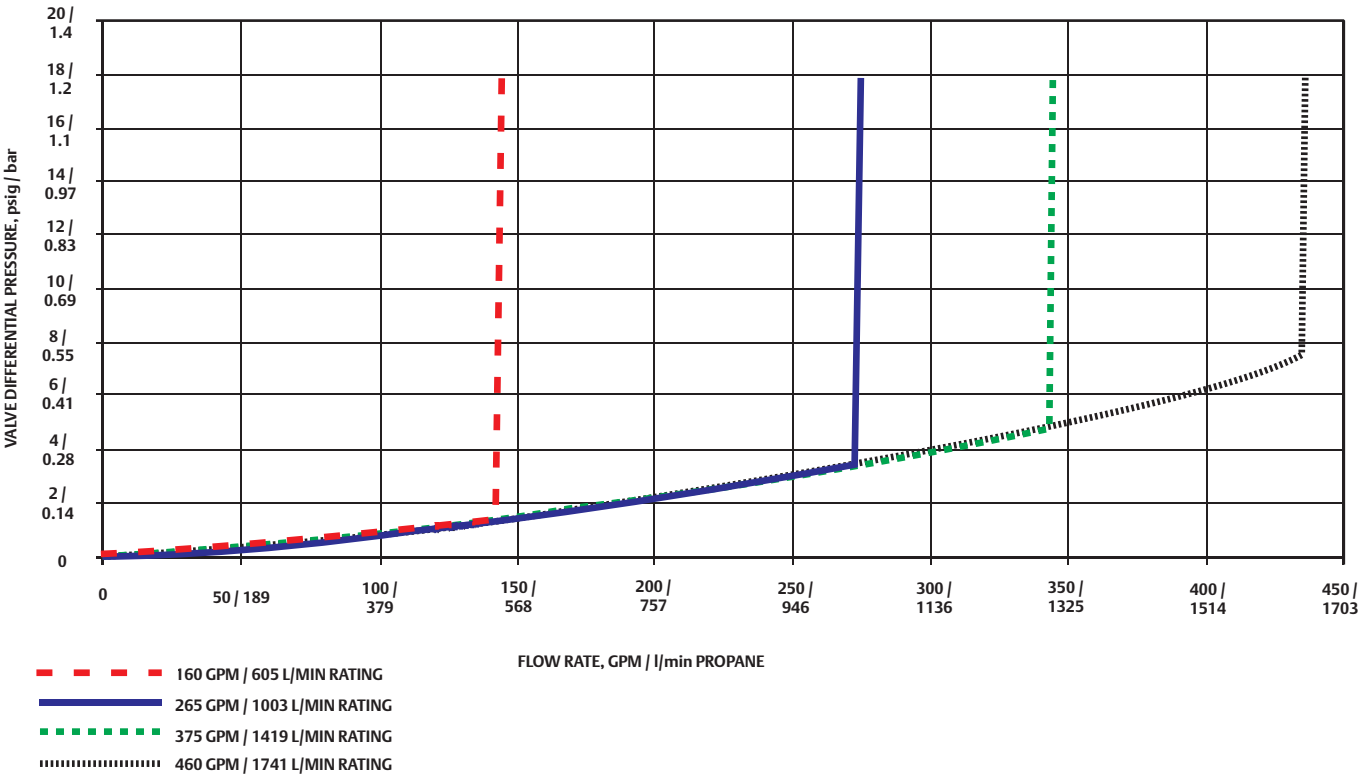

1. Product has passed Fisher testing for pressure shutoff down to -40°F / -40°C.

Type C477/471-16 "Bottom of Tank" Position Flow Curve, Half Coupling

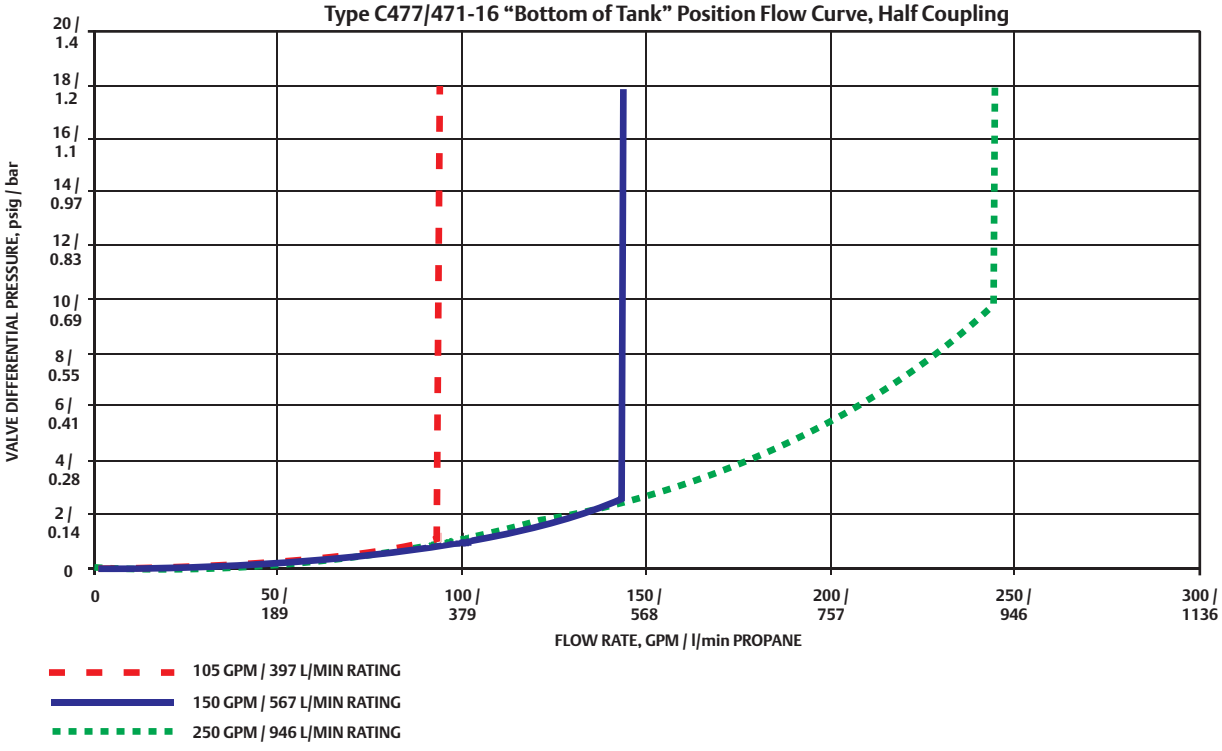

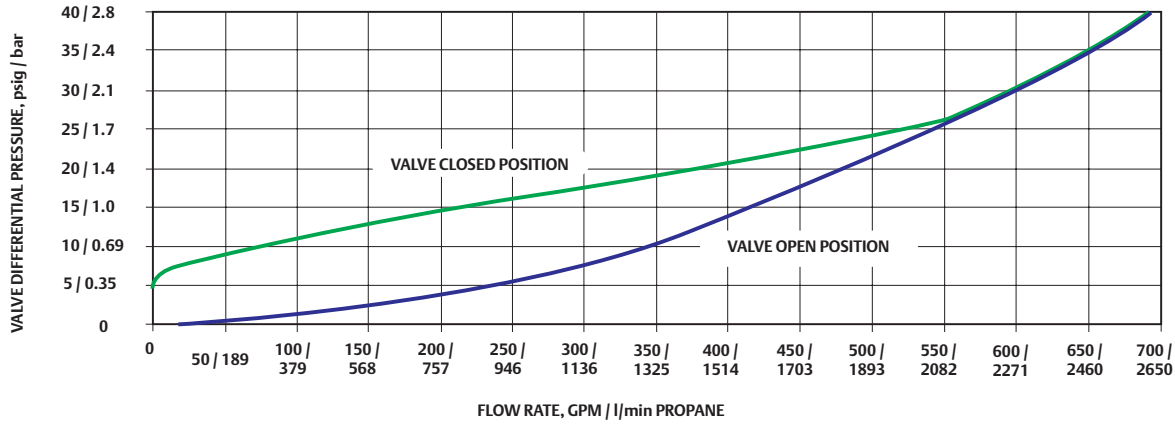

Type C477-24 Typical Reverse Flow Curve

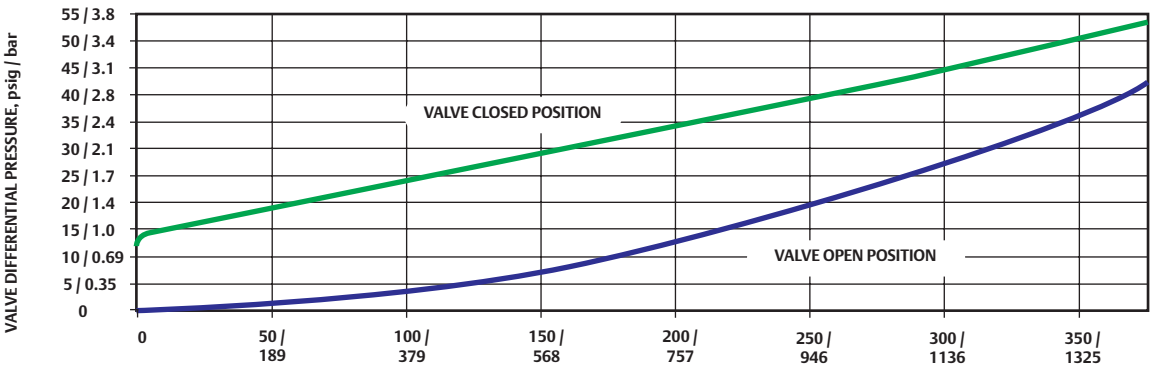

Type C477-16 Typical Reverse Flow Curve

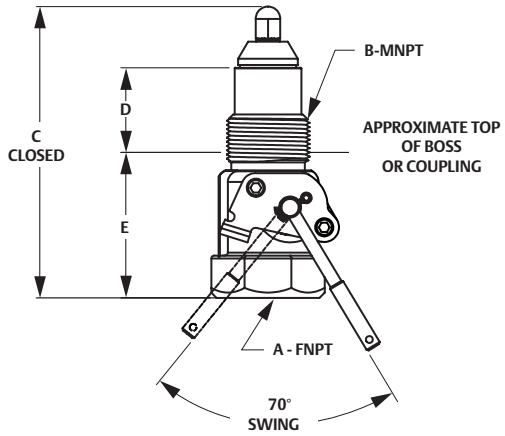

C407-10 AND C807-10 SERIES

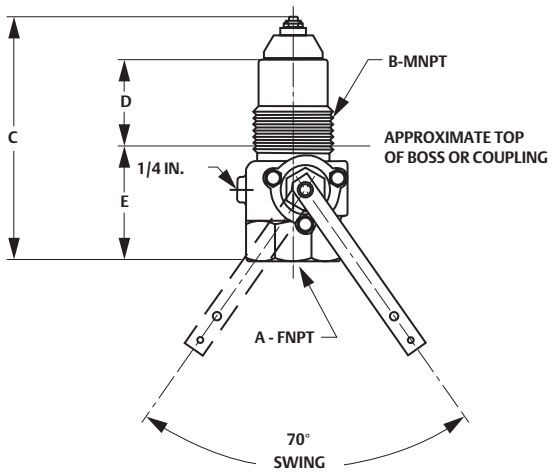

C477, C877 AND C897 SERIES

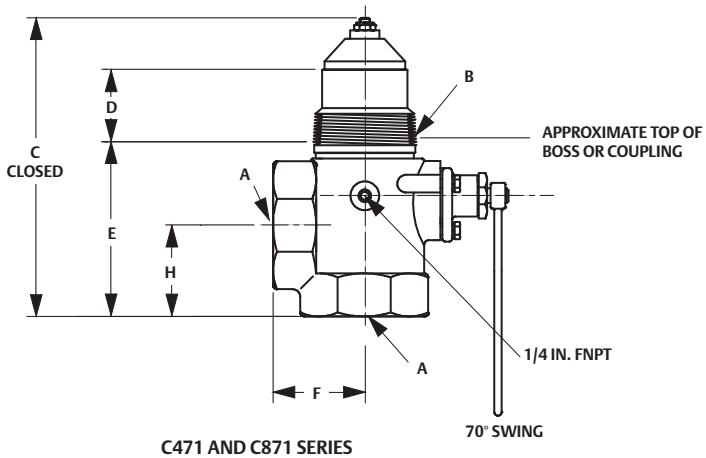

C471 AND C871 SERIES

UL® Approved C400 Series Internal Valves								
TYPE	A, IN. (FNPT)	B, IN. (MNPT)	DIMENSION, IN. / mm					INSTALLATION CLEARANCE DIAMETER, IN. / mm
			C	D	E	F	H	
C407-10	1.25	1.25	5.90 / 150	1.86 / 47	2.88 / 73	----	----	5.00 / 127
C471-16	2	2	8.07 / 205	2.40 / 61	4.05 / 103	2.76 / 70	2.66 / 68	10.00 / 254
C471-24	3	3	9.00 / 229	2.60 / 66	4.57 / 116	3.25 / 83	3.26 / 83	13.38 / 340
C477-16	2	2	8.07 / 205	2.40 / 61	4.05 / 103	----	----	10.00 / 254
C477-24	3	3	9.00 / 229	2.60 / 66	4.57 / 116	----	----	13.38 / 340

Threaded Body Outlet Design and Size	
TYPE	WRENCH SIZE, IN.
C407-10	2-5/16 Octagon
C471-16 and C477-16	3-1/4 Octagon
C471-24, C477-24 and C486-24	4-1/2 Octagon



TYPE C483-24



TYPE C484-24

Flanged Internal Valves

Flanged valves provide a sturdy and compact means of directly mounting a pump or piping connection. Special stud bolts, weakened with a groove on the outside diameter, are furnished with the valves to permit the pump or piping to shear off in the event of an accident, leaving the valve intact. A built-in excess flow valve reduces the chance of uncontrolled product discharge when flow exceeds the rated flow capacity.

All flanged valves have an internal screen for pump protection that can be easily removed if the valve is used primarily for filling the tank. They also contain PTFE packing to resist stub shaft leakage. These valves can be activated manually, by cable control or by air cylinder (refer to pages 60 and 61).

3 in. / DN 80 Flanged Sizes

Type C484-24 – A single-flange unit widely used on bobtail and transport trucks for a compact means of direct pump connection to the valve outlet. Another application for the Type C484-24 is on in-line installations.

Type C483-24 – A double-flange unit designed for special bobtail truck applications where the pump must be lowered to clear the truck frame or other obstacles. A special shear section in the body permits the lower section of the valve to shear off in the event of an accident, leaving the critical shutoff parts within the tank.

UL® Approved 3 In. / DN 80 Flanged Internal Valves

Size	Type Number		Closing Flow Propane								Closing Flow NH_3			
	Single Flanged	Double Flanged	Single Flanged, Bottom of Tank Position*		Double Flanged, Bottom of Tank Position*		Single Flanged, Top of Tank Position*		Double Flanged, Top of Tank Position*		Single Flanged, Bottom of Tank Position*		Double Flanged, Bottom of Tank Position*	
			GPM	l/min	GPM	l/min	GPM	l/min	GPM	l/min	GPM	l/min	GPM	l/min
3 in. / DN 80	C484-24-16	C483-24-16	160	606	160	606	180	681	180	681	144	545	144	545
	C484-24-25	C483-24-26	250	946	265	1003	250	946	290	1098	239	905	226	855
	C484-24-40	C483-24-40	400	1514	400	1514	400	1514	400	1514	361	1366	361	1366

*See Internal Valve Flow Positions (page 49) for description of Bottom of Tank, Top of Tank and Horizontal Flow Positions.

UL Approved 3 In. / DN 80 Flanged Internal Valves

Size	Type		Vapor Capacity Propane							
	Single Flanged	Double Flanged	100 psig / 6.9 bar Inlet, Single Flanged, Bottom of Tank Position**		100 psig / 6.9 bar Inlet, Double Flanged, Bottom of Tank Position**		100 psig / 6.9 bar Inlet, Single Flanged, Top of Tank Position*		100 psig / 6.9 bar Inlet, Double Flanged, Top of Tank Position*	
			SCFH	SCMH	SCFH	SCMH	SCFH	SCMH	SCFH	SCMH
3 in. / DN 80	C484-24-16	C483-24-16	71,000	2011	71,000	2011	96,000	2718	96,000	2718
	C484-24-25	C483-24-26	NOT LISTED		127,000	3568	NOT LISTED		148,000	4191
	C484-24-40	C483-24-40	181,000	5125	181,000	5125	190,000	5380	190,000	5380

*See Internal Valve Flow Positions (page 49) for description of Bottom of Tank, Top of Tank and Horizontal Flow Positions.

Flanged Valve Specifications

Pressure Rating: 400 psig / 27.6 bar WOG
Temperature: Types C483 and C484[1]: -20 to 150°F / -29 to 66°C
Type C404-32[2]: -20 to 150°F / -29 to 66°C
Body: Types C483 and C484-24: Cast steel and WCC
Type C404-32: Stainless steel
Packing: PTFE
Seat Discs: Molded, synthetic rubber
Stub Shaft and Stem: Stainless steel
Gaskets: Non-asbestos spiral wound graphite

WARNING

A line break downstream of a pump may not actuate the excess flow valve. If any break occurs in the system or if the excess flow valve closes, the system should be shutdown immediately.

DO NOT USE the excess flow function incorporated into Fisher™ C Series internal valves or F Series excess flow valves to satisfy the passive shutdown requirement in 49CFR§173.315(n)(2). DO NOT include the excess flow incorporated into Fisher C Series internal valves or F Series excess flow valves in a DCE certification under 49CFR§173.315(n)(2). The cargo tank manufacturer must install some other equipment that satisfies the requirement for passive shutdown capability under 49CFR§173.315(n)(2).

Failure to follow this warning could result in serious personal injury or property damage from fire or explosion in the event of an unintentional release of product during an unload operation.

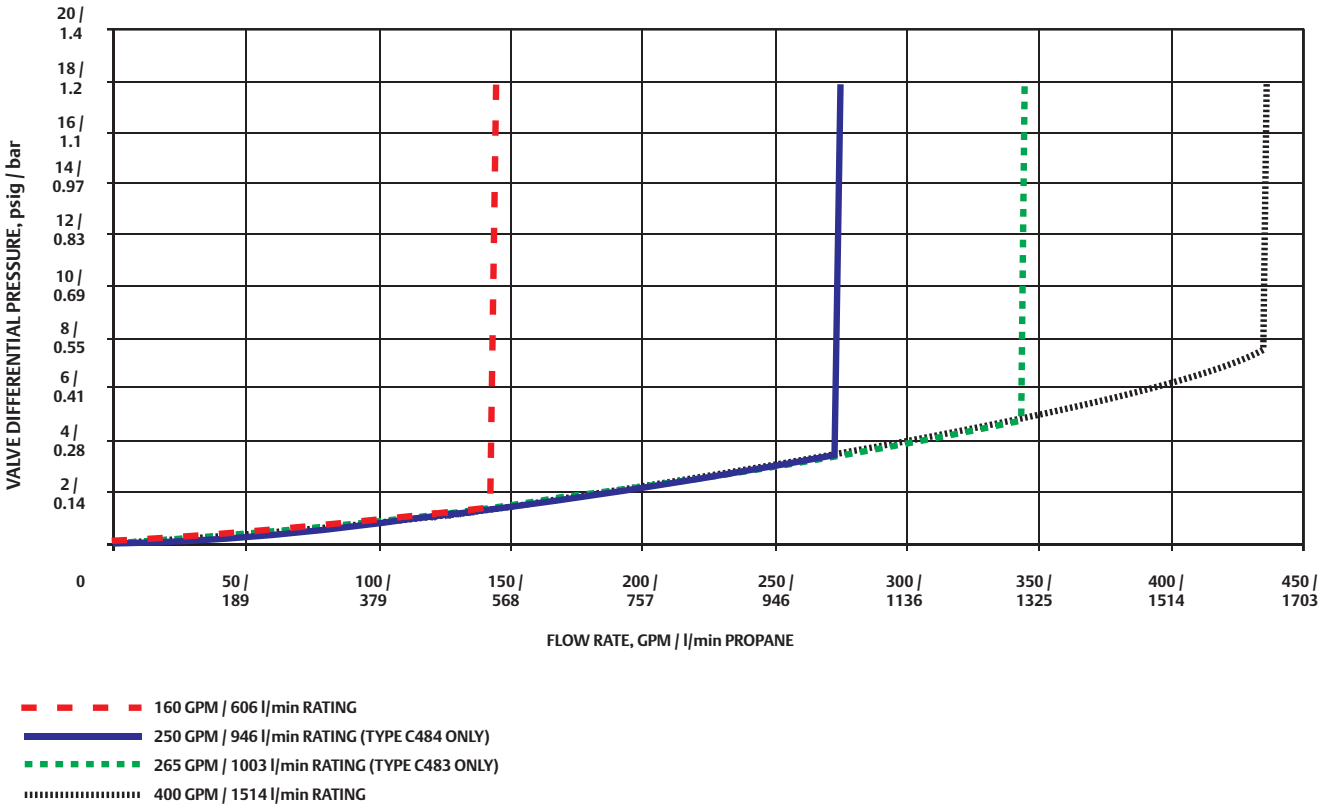

1. Product has passed Fisher testing for pressure shutoff down to -40°F / -40°C.
2. Product has passed Fisher testing for pressure shutoff down to -50°F / -45°C.



TYPE C404-32



TYPE C404A32 WITH P614A ACTUATOR

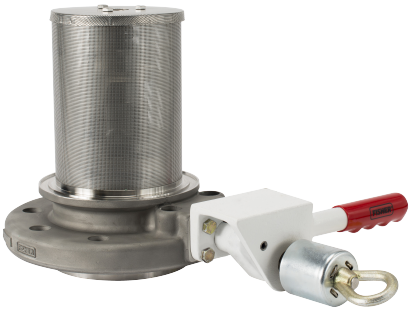

TYPE C404M32 WITH P313 HANDLE ASSEMBLY

4 in. / DN 100 Flanged Size (Stainless Steel Construction)

Type C404-32 – Used widely on transport trucks and large storage tanks, the 4 in. / DN 100 flanged unit comes standard with all stainless steel construction for maximum protection against rust and corrosion. For easy field maintenance, the seat ring is field replaceable.

The Type C404-32 is the only internal valve that cannot be opened and closed by the Type P650 cable control (refer to page 60).

Factory installation of an air cylinder or manual operating handle (with remote release mechanism) is available on the 4 in. / DN 100 flanged valves. Refer to ordering information below.

UL® Approved 4 In. / DN 100 Flanged Internal Valves

TYPE[1]			INLET, IN. / DN	OUTLET, IN. / DN	CLOSING FLOW, GPM / l/min PROPANE[2]	VAPOR CAPACITY, SCFH / SCMH PROPANE	
Cable	Air	Manual				25 psig / 1.7 bar Inlet	100 psig / 6.9 bar Inlet
C404-32-34	C404A 32-34	C404M 32-34	4 / 100 CL300 ASME RF Modified 5-7/8 / 149 mm diameter bore	4 / 100 CL300 ASME RF	340 / 1287	61,600 / 1745	104,800 / 2968
C404-32-40	C404A 32-40	C404M 32-40			400 / 1514	63,900 / 1810	108,600 / 3076
C404-32-60	C404A 32-60	C404M 32-60			600 / 2271	83,200 / 2356	141,500 / 4007
C404-32-80	C404A 32-80	C404M 32-80			800 / 3028	259,600 / 7352	356,200 / 10,088
C404-32-100	C404A 32-100	C404M 32-100			1000 / 3785	----	----

1. 4 in. / DN 100 size available in single flange only.
2. Closing flow vertical down.

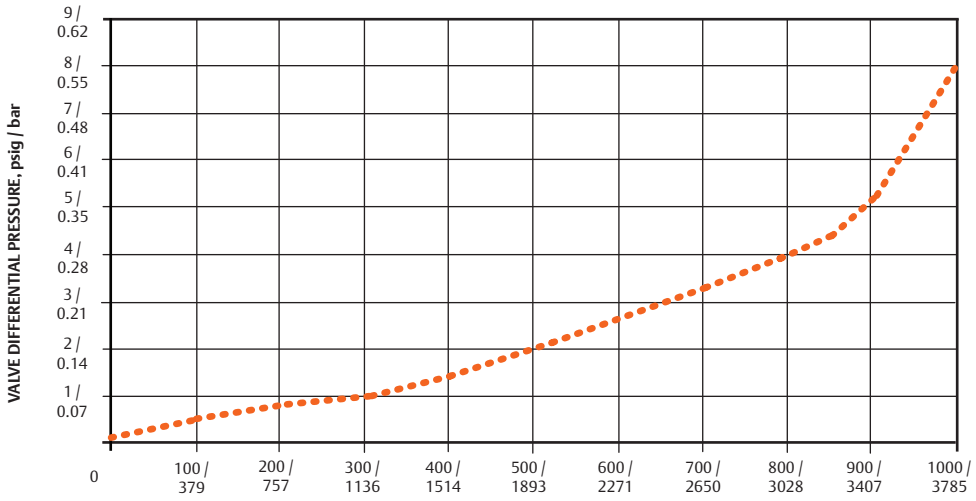

TYPE C404-32 CAPACITY CURVE



TYPE C883-24



TYPE C884-24

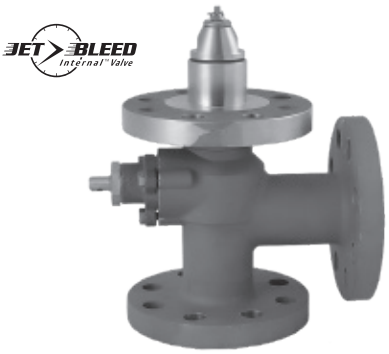

TYPE C891



TYPE C804-32



TYPE C804A-32

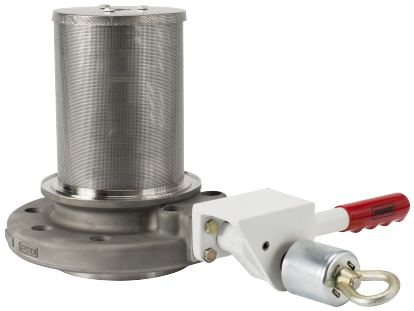

TYPE C804M-32

C800 Series Flanged Internal Valves

The Fisher™ C800 Series Flanged Internal Valves provide the same primary shutoff and excess flow protection as the C400 Series, but are offered in a wide variety elastomeric seals. With industrial process installations spanning the globe, the robust flanged C800 Series has been the trusted product line for decades.

Type C804H-32 for Y-Grade: designed with a new formulated seal to withstand corrosive effects in Y-Grade natural gas liquid (NGL) applications. Retrofit kit available for Type C404-32: RC404YGT012.

Specifications

Emerson is the leader in special service conditions and offers a wide selection of metallic and elastomeric components to meet your demands. Every process or special service fluid has unique compatibility properties, pressure ranges and temperature ranges. Please contact your Fisher LPG Equipment distributor to help select the configuration that's best for you.

C800 Series Special Service Internal Valves

CONNECTION INLET X OUTLET	BODY STYLE	TYPE	BODY MATERIAL	ELASTOMERS AVAILABLE FOR ORDER[3]					
2 in. CL300 RF	Tee Body	C891-16	SST	EPDM	Viton®[1]	Kalrez®[2]	Neoprene (CR)	Nitrile (NBR)	PTFE
3 in. CL300 RF	Tee Body	C891-24							
3 in. Mod. CL300 RF Fange x 3 in. CL300 RF Flange	Double Flange	C883-24	Steel						
	Single Flange	C884-24							
4 in. Mod. CL300 RF Flange x 4 in. CL300 RF Flange	Single Flange	C804-32	SST	Viton®[1]	PTFE	Y-Grade NGL[6]	Nitrile (NBR)	----	----
		C804A-32[4]							
		C804M-32[5]							

1. Viton® or Fluorocarbon (FKM) equivalent
2. Kalrez® or Perfluoroelastomer (FFKM) equivalent
3. Additional materials can be sourced upon request. Please contact your Fisher LPG Equipment Distributor for more information.
4. Air Actuation.
5. Manual.
6. Available as Types C804H32, C804HA32 and C804HM32.

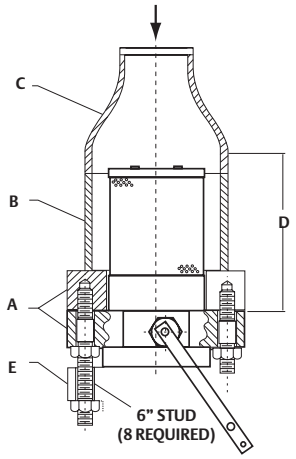

In-Line Piping				
A	DIMENSION, IN. / mm			OUTLET
	B	C	D	E
ASME CL300 RF Flange	Pipe Size	Reducer	Minimum	ASME CL300 RF Flange
3 in. / DN 80	6 / 152	6 x 3 / 152 x 76	7.9 / 201	3 in. / DN 80
4 in. / DN 100	8 / 203	8 x 4 / 203 x 102	11.5 / 292	4 in. / DN 100

Studding Outlet (modified flange)

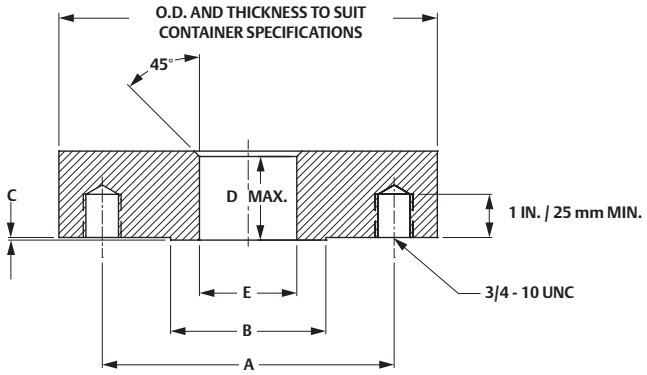

Tank Connections								
MODIFIED CL300 ASME RF FLANGE	DIMENSION, IN. / mm							MATING FLANGE O.D., IN. / mm
	A			B RF	C RF	D	E (Modified)[1]	
	DBC	No.	Size					
3 in. / DN 80	6.62	8	0.75	5.75 / 146	0.06 / 1.5	1.50 / 38	4.62 / 117	8.25 / 210
4 in. / DN 100	7.88	8	0.75	7.00 / 178	0.06 / 1.5	1.56 / 40	5.88 / 149	10.00 / 254

1. Can be increased up to 4.81 in. / 122 mm for 3 in. valve and 6.19 in. / 157 mm for 4 in. valve, if valve and gasket are centered with modified flange opening.

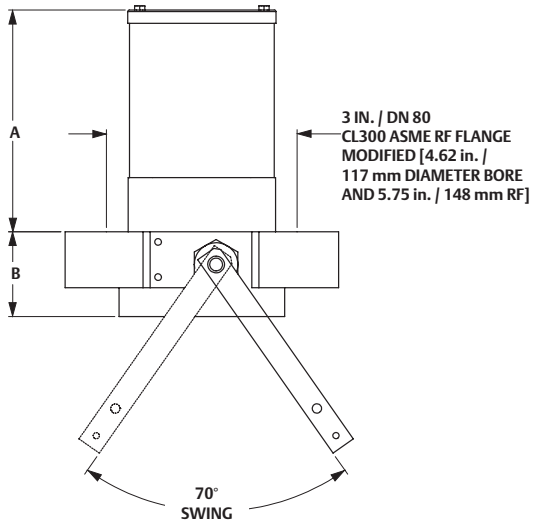

TYPES C484-24 AND C884-24

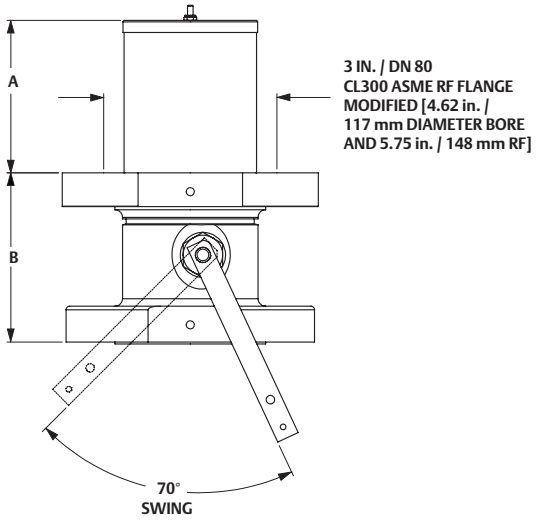

TYPES C483-24 AND C883-24

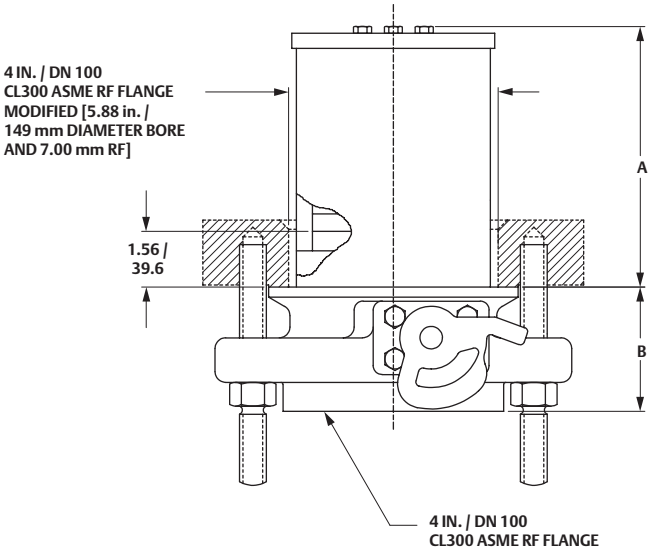

TYPES C404-32 AND C804-32

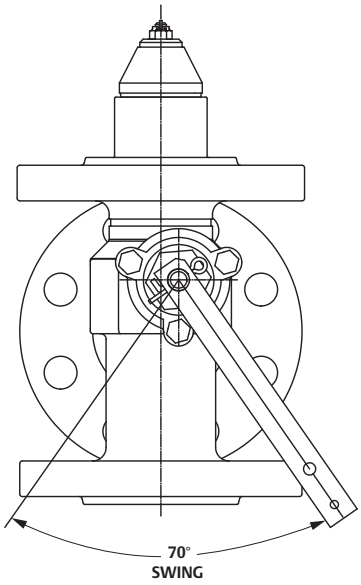

TYPE C891

Flanged Valves			
TYPE	TANK CONNECTION, IN. / DN	DIMENSION, IN. / mm	
		A	B
C484-24	3 / 80 CL300 RF Flange	6.75 / 171	2.56 / 65
C483-24	3 / 80 CL300 RF Flange	5.33 / 135	5.62 / 143
C404-32	4 / 100 CL300 RF Flange	7.55 / 192	3.48 / 88



TYPE P163A

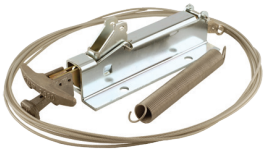

TYPE P650



TYPE P341



TYPE P340



TYPE P164C



TYPE P315

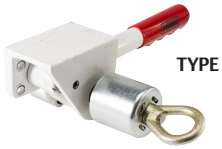

TYPE P313

Cable Controls

Fisher™ cable controls and accessories can be furnished to remotely open and close all internal valves except the 4 in. / DN 100 flanged size. This equipment can be used to comply with NFPA 58 and DOT requirements for MC331 cargo tanks.

Cable systems can also be used on stationary storage tanks at bulk plants and on in-line applications to increase safety during transfer operations. All fusible elements and links used in the cable control systems comply with NFPA 58 and MC331 requirements.

Type P650 or P651 Primary Cable Control – Capable of actuating all Fisher internal valves except the 4 in. / DN 100 Type C404-32, the Type P650 or P651 opens and closes the valve from a remote point, usually the rear of the bobtail or transport. Pulling the handle of the primary control opens the internal valve; pushing the handle closes the valve. There are three notches on the primary control that give a travel of 4, 5 or 6 in. / 102, 127 or 152 mm depending upon the travel required by the valve's operating lever.

Included with each Type P650 primary control is a 20-foot / 6.1 m cable, Type P134 fusible links, a return spring and mounting hardware. If just the primary cable control is needed, order Type P651, which is available without any of the other accessories.

Type P163A or P164A Auxiliary Remote Release – These units allow the internal valve to be closed from a location other than the primary control point (Type P650 or P651). Pulling the auxiliary release handle trips the release mechanism on the primary control to close the internal valve.

The two assemblies are identical except for the length. Type P163A has an untrimmed length of 25 feet / 7.6 m and Type P164A has an untrimmed length of 50 feet / 15.2 m. Both cables can be trimmed to any length. Both releases can be installed through mounting brackets up to 3/8 in. / 9.5 mm thick.

Type P164B – a release assembly that uses 50 feet / 15 m of cable housing which does not require elaborate guiding like uncovered cables.

Type P164C – an Auxiliary Remote Release without cable is also available.

Latch/Remote Release Mechanisms

With the exception of the 3 in. / DN 80 flanged sizes, all Fisher internal valves can be fitted with a manual latch/remote release mechanism. When the internal valve's operating lever is manually moved to the open position, the lever can be latched in the open position. The lever can be released from a remote location by pulling on the cable attached to a pull ring, thus closing the internal valve. A built-in fusible element in the latch/release melts if exposed to fire allowing the operating lever to return to the closed position.

Type P340 – Fits all 2 and 3 in. NPT internal valves (Types C471 and C477). Type P340 is easily installed in the field by removing two of the three gland cap screws.

Type P341 – Fits 1-1/4 in. NPT C407 Series internal valves. Also available factory installed, Type C407M10.

Type P342 – Bi-directional latch/remote release for the 1-1/4 in. NPT C407-10 Series allows operation from two directions.

Type P313 – Fits 4 in. / DN 100 Type C404-32 internal valves. Also available factory installed, Type C404M32. The Type P315 remote release should be used with this release.

Type P314 – This cable assembly is used as an attachment from the Type C404-32 operating lever to the primary cable control. The assembly includes a 40-foot / 12.2 m cable, a special bushing with a fusible element and clamp. The bushing fits in the valve-operating lever and has a built-in fusible element that will melt if exposed to fire, allowing the Type C404-32 to close. The cable connects to the bushing and the clamp permits the other end of the cable to be attached to the fusible link (not furnished) at the primary cable control.

Type P315 – On manually actuated 4 in. / DN 100 valves (Type C404M32), Type P315 remote handle release can be used to close the internal valve from a remote location. Cable linkage (30 feet / 9.1 m) and mounting hardware are included.

Internal Valve Accessories

INTERNAL VALVE SIZE, IN. / DN	PRIMARY CABLE CONTROL	AUXILIARY REMOTE RELEASE	CABLE ASSEMBLY	LATCH/RELEASE MECHANISM
1-1/4, 2 and 3 / 32, 50 and 80 (NPT or Flanged)	Type P650 or P651(1)	Type P163A or P164A	Included with Type P650	Type P341, P342 (C407-10 Series) or Type P340 (C400 Series)
4 / 100 Flanged	Use Allegheny or Wheaton Control	Type P315	Type P314	Type P313(2)

1. Type P651 is a primary control only, no accessories.
2. Use with Type P315 remote release mechanism.



TYPE P389



TYPE P613



TYPE P623



TYPE P639A



TYPE P614A



TYPE P731



TYPE P713



TYPE P723



TYPE P739



TYPE P714

NOTE: INTERNAL VALVES SHOWN ARE NOT INCLUDED.

P Series Pneumatic Actuators

All Fisher™ internal valves can be ordered with a pneumatic actuators that permits the valve to be opened and closed from a remote location. Two styles of pneumatic actuators are available: P600 Series 'Brake Chamber' style actuators and P700 Series 'Rotary' style rack-and-pinion actuators. For the P600 Series when air pressure is applied to the actuator, it moves the actuator's rod and internal valve operating lever to the open position. Upon loss of air pressure, the valve's operating lever returns to the closed position. For the P700 Series, when air pressure is applied to the actuator, pistons act on a gear assembly that rotates the internal valve lever to the open position. Upon loss of air pressure, the valve will return to the closed position. Besides air pressure, nitrogen or carbon dioxide can also be used to pressure the actuators. In addition, the P700 Series supply source can be propane vapor.

Use of a pneumatic actuator permits the opening and closing of the internal valve to be tied into the air brake of the transport or bobtail. Pneumatic Actuators can also provide a convenient way to remotely operate a number of internal valves on stationary storage tanks at bulk plants.

Type P389 (1-1/4 in. / DN 32 Size) – This actuator can only be used with the C407-10 Series valve. All necessary hardware for installing the actuator is included. Minimum pressure is 60 psig / 4.1 bar; maximum pressure is 250 psig / 17.2 bar. Fuse Plug Part Number T1140399982 ordered separately.(1)

Types P613, P623, P639A and P614A Brake Chamber Actuators – The actuator attaches directly to the valve after removal of the cable-operating lever. Included in each assembly is an operating lever and appropriate mounting hardware specific to each respective valve.

These actuators can only be used with the internal valves as specified on the table below.

Types P731, P713, P714, P723 and P739 Rotary Actuators – The actuator attaches directly to the valve after removal of the cable-operating lever. Included in each assembly is an operating lever and appropriate mounting hardware specific to each respective valve in addition to air pressure, nitrogen and carbon dioxide, the P700 Series can be actuated with propane vapor.

Fuse Plugs – When installed in the actuator piping at the valve, will allow the pneumatic pressure to vent closing the valve if the plug is exposed to temperature between 208 to 220°F / 98 to 104°C. Fuse plugs are available in two sizes, 1/8 in. NPT (T1140399982) and 1/4 in. NPT (T1033699982). Fuse Plugs come with all Types P600 and P700 actuators, EXCEPT Type P389. Part Number T1140399982 to be ordered separately.(1)

Pneumatic Actuators Ordering Information

INTERNAL VALVE TYPE	BRAKE CHAMBER STYLE PNEUMATIC ACTUATOR		ROTARY STYLE PNEUMATIC ACTUATOR	
	Type	Supply Pressure Range, psig / bar	Type	Supply Pressure Range, psig / bar
C407-10	P389(1)	60 to 250 / 4.1 to 17.2	P731	50 to 125 / 3.5 to 8.6
C484-24	P613	20 to 125 / 1.4 to 8.6	P713	25 to 125 / 1.7 to 8.6
C483-24	P623	20 to 125 / 1.4 to 8.6	P723	25 to 125 / 1.7 to 8.6
C471 and C477 (2 and 3 in. NPT Sizes)	P639A	20 to 125 / 1.4 to 8.6	P739	25 to 125 / 1.7 to 8.6
C404-32	P614A	40 to 125 / 2.8 to 8.6	P714	40 to 125 / 2.8 to 8.6

1. Fuse Plug Part Number T1140399982 must be ordered separately.

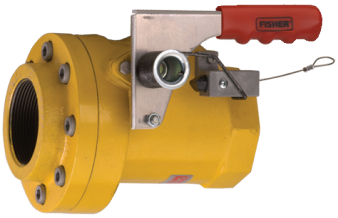

TYPE N551 (VALVE CLOSED)

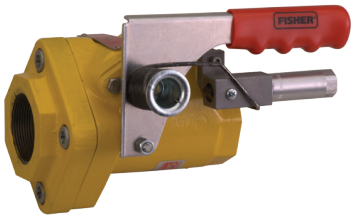

TYPE N551 WITH TYPE P327D



TYPE N551 WITH TYPE P539A

Snappy Joe™ Emergency Shutoff Valves for Bulk Plants

Snappy Joe **Type N551** Emergency Shutoff Valves (ESVs) are designed for in-line installations, usually near a bulkhead. The valves provide a means of shutting off gas in the event of a hose rupture or piping break at the transfer area to avoid a large scale loss of LPG or Anhydrous Ammonia (NH_3).

The valves can be manually opened and closed at the installed location or closed remotely by either cable or air. A remote operating actuator is also available.

High Flow Capacity – The main poppet moves completely out of the flow stream for extremely low restriction-to-flow.

Operational Ease – Moving the operating lever to the vertical position opens the valve, making it simple to tell if the unit is open or closed. A pilot valve in the poppet opens as the lever is moved upward to pressurize the hose. Once equalized, the poppet moves quickly to the open position.

The valve is closed by simply pushing the lever down without first having to trip a latch. The operating lever is easily reached from across a bulkhead. All sizes look similar and operate exactly the same, an important point in an emergency situation.

Fusible Element – The fusible element is located at the hub of the operating lever and stub shaft. When exposed to fire, the element melts allowing the stub shaft to turn. The poppet then moves to the closed position, even if the operating lever has been wired open.

Rugged Construction – Heavy duty construction makes Snappy Joe ESVs suitable for use as a "working" shutoff valve for the transfer area, even under frequent use. The internal closing spring is protected from the elements and tampering. All seats and seals use UL®-approved materials rated for -40°F / -40°C and have metal back-up seals for extended fire resistance. The valves are rated 400 psig / 27.6 bar WOG.

Ease of Service – Serviceable without removal from the pipeline. Parts that wear are external and can be changed out in a matter of minutes. The packing can be changed with the valve in-line.

Cable Release – Standard valves are fitted with a release mechanism for cable attachment. A cable connected to the wire loop allows closure from a safe remote location, such as the bulk plant entrance.

While the ordinary cable can be used, the **Type P164B** release assembly is available. This assembly uses 50 feet / 15 m of cable housing which does not require elaborate guiding like uncovered cables.

Pneumatic Operation – Remote pneumatic closure is available with **Type P327D** release. Depending upon valve inlet pressure, a minimum supply pressure of 30 to 70 psig / 2.1 to 4.8 bar on the Type P327D allows the valve to be latched in the open position with manual closure possible at the valve. Loss of supply pressure to the cylinder permits the ESV to close. Air, nitrogen or CO_2 can be used for the cylinder supply source. Maximum inlet pressure to the cylinder is 125 psig / 8.6 bar. Operating Temperature Rating = -40 to 160°F / -40 to 71°C.

Type P539A pneumatic actuator permits opening and closing Fisher™ N551 Series Snappy Joe emergency shutoff valves (ESVs) both at the valve with the use of a pneumatic 4-way valve and from a remote location. The actuator opens the valve when pressure is applied. Minimum pressure is 20 psig / 1.4 bar and maximum pressure is 30 psig / 2.1 bar.

Upon loss of pressure, the N551 Series closes, assisted by the spring in the pneumatic actuator.

Type N851 for Special Service

The Type N551 can be ordered with alternate elastomer compounds for various industrial process applications. The **Type N851K** is assembled with FFKM (Kalrez® or equivalent) and can be used in a variety of fluid services. Other materials may be available. Contact your local Fisher LPG Distributor for more details.

Emergency Shutoff Valves				
TYPE	BODY SIZE, IN.	FLOW IN GPM / l/min PROPANE		ACCESSORIES
		1 psid / 69 mbar d	2 psid / 0.14 bar d	
N551-10	1-1/4 FNPT	110 / 416	150 / 568	Type P164B Cable Release Type P327D Pneumatic Release Type P539A Pneumatic Actuator
N551-16	2 FNPT	190 / 719	295 / 1117	
N551-24	3 FNPT	580 / 2195	850 / 3127	
N551-24F	NPS 3 CL300	580 / 2195	850 / 3127	

TYPE N551 CAPACITY CURVE

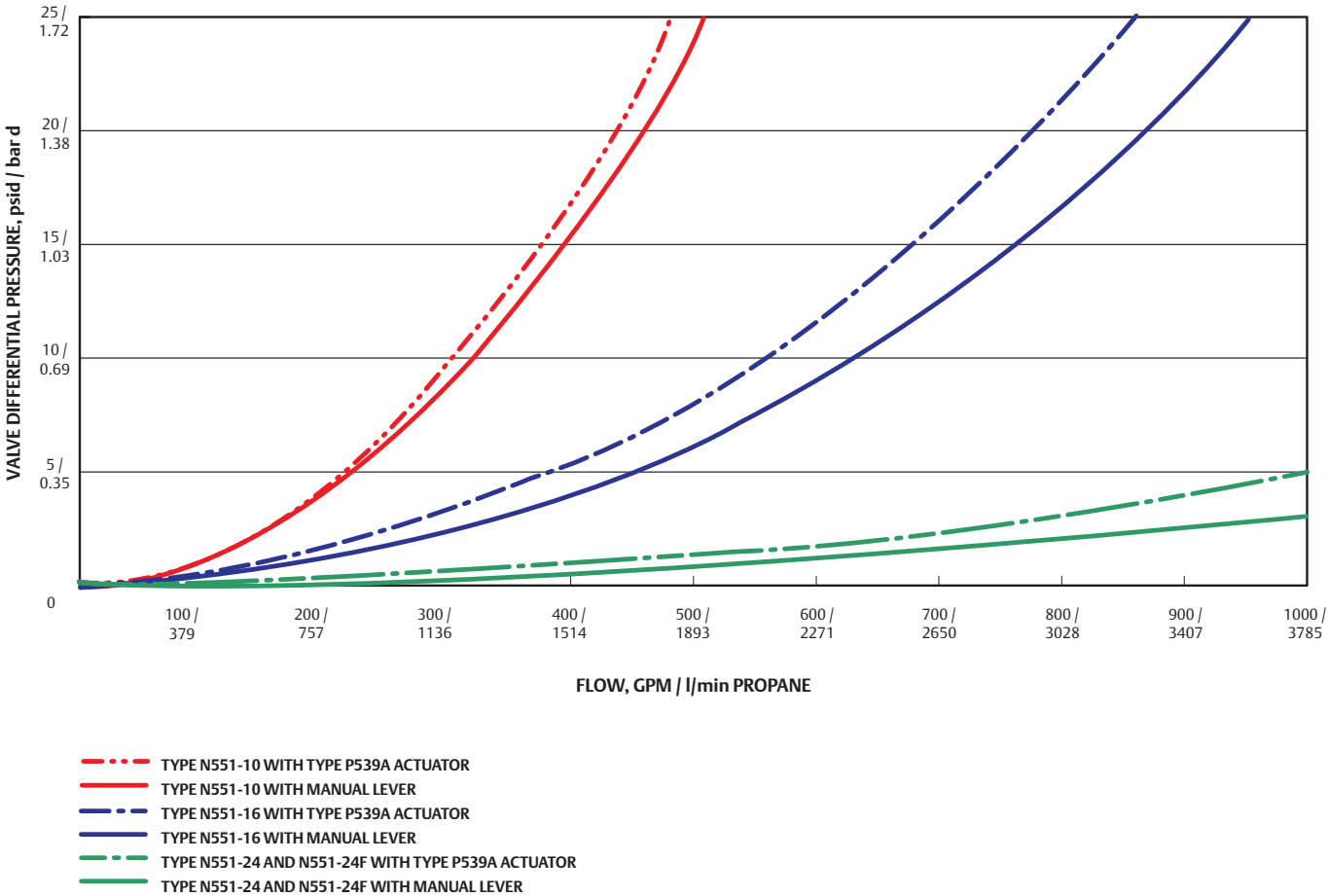

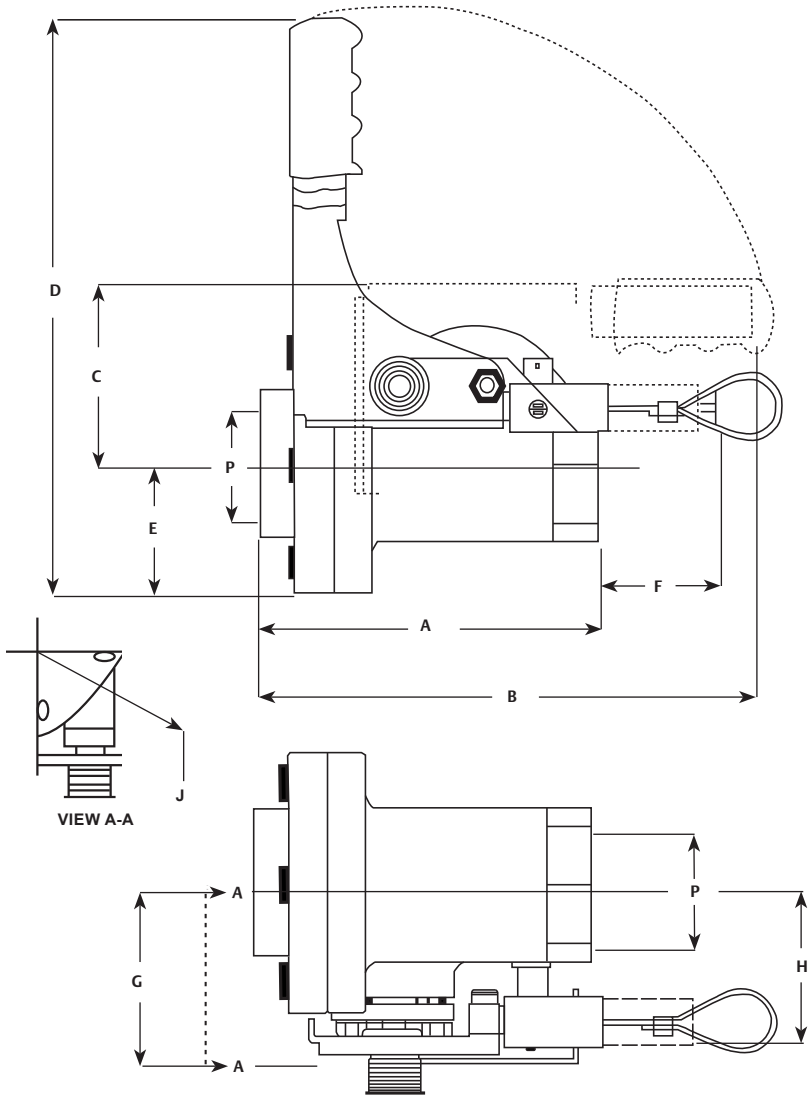

TYPE N551 DIMENSIONS

Type N551 Dimensions									
P, NPT	In. / mm								
	A	B	C	D	E	F	G	H	J
1-1/4 in.	5.9 / 150	9.6 / 244	3.4 / 86	10.4 / 264	2.0 / 51	3.6 / 91	5.1 / 130	3.2 / 81	5.5 / 140
2 in.	7.2 / 183	10.0 / 254	3.9 / 99	11.6 / 295	2.9 / 74	2.6 / 66	5.4 / 137	3.5 / 89	6.0 / 152
3 in.	9.2 / 234	10.6 / 269	4.5 / 114	12.9 / 328	3.5 / 89	1.2 / 30	5.7 / 145	4.2 / 107	6.5 / 165



TYPE N551-24F

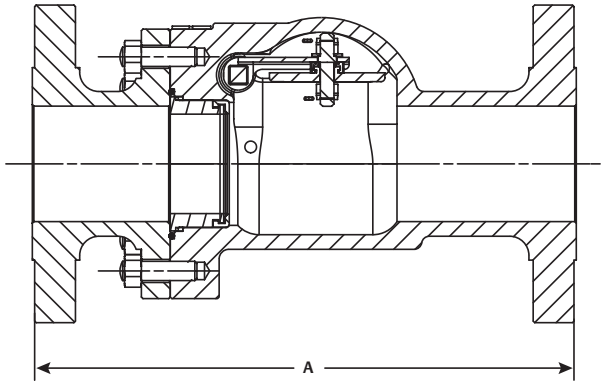

TYPE N551-24F VALVE BODY

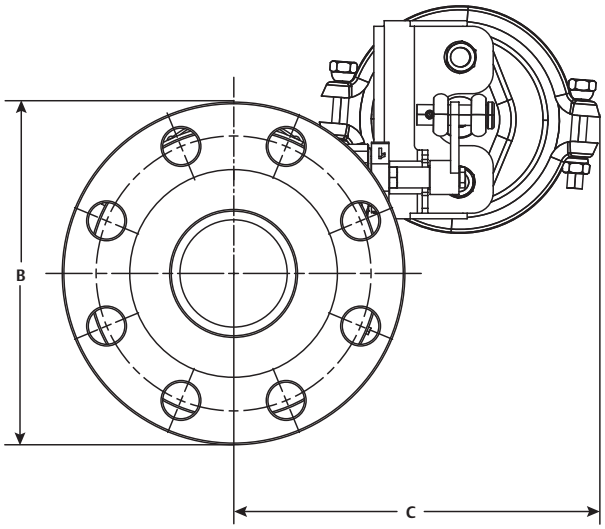

TYPE N551-24F WITH TYPE P539A ACTUATOR

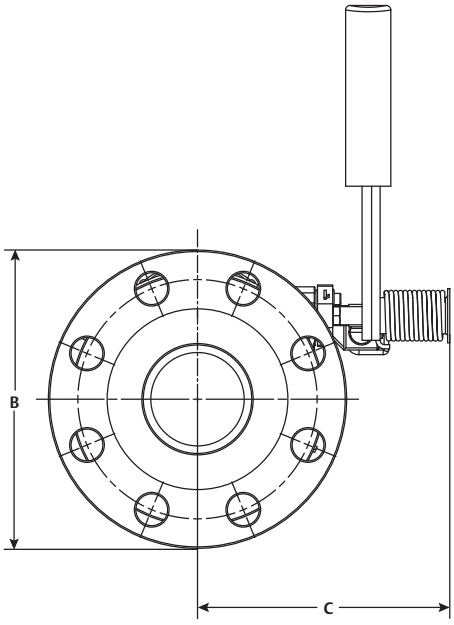

TYPE N551-24F WITH LATCH BLOCK OR TYPE P327D PNEUMATIC RELEASE

Type N551 Flanged Dimensions			
ACTUATOR TYPE	In. / mm		
	A	B	C
P539A	14 / 359	8.25 / 210	8.82 / 224
STD. or P327D	14 / 359	8.25 / 210	6.98 / 177

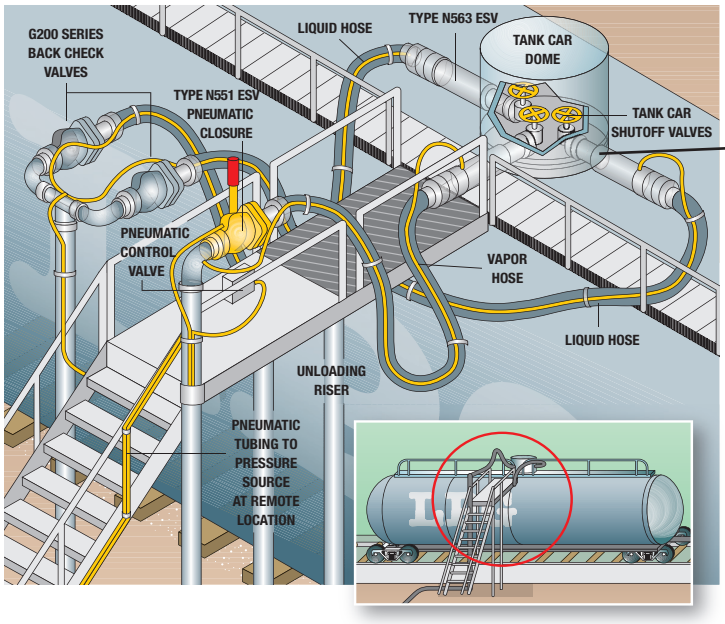

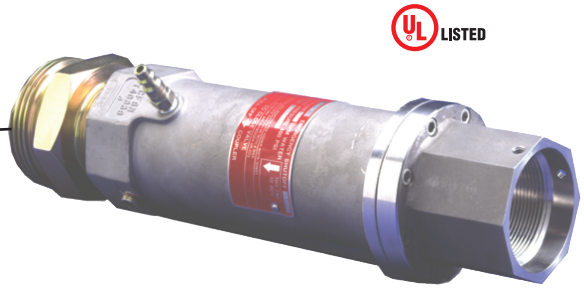

TYPE N563/N564

Snappy Joe™ Emergency Shutoff Valves for Railroad Tank Cars

Snappy Joe Emergency Shutoff Valves (ESVs) are designed for railcar protection and attached to the shutoff valves on railroad tank cars (refer to installation drawing). Typically three ESVs are used – two on the liquid lines and one on the vapor line. NFPA 58 regulations call for ESV protection on both sides of the transfer hose or piping. Types N563 and N564 are UL® listed for service in Propane and Anhydrous Ammonia. Its Nitrile (NBR) elastomer are UL approved to -40°F / -40°C.

Pneumatically operated, the valve is opened and closed by means of a standard quick-disconnect coupling (furnished). Approximately 20 to 60 psig / 1.4 to 4.1 bar is needed to open the valve, depending upon tank car pressure. Remote closure from one or more points, such as the unloading riser, is accomplished by exhausting pressure from the valve's piston chamber with a pneumatic control valve.

Ease of Use

- Nipple lengths attached to the 2 in. NPT female inlet are field selectable. These nipples can be easily secured and replaced.
- Outlet is FNPT or ACME for easy connection
- Pneumatically operated with quick disconnect coupling (included)

Application Flexibility

- UL approved for LPG and Anhydrous Ammonia (Nitrile (NBR) only)
- Comprehensive line of elastomers for all other compressed gas service
- A 1/4 in. FNPT opening in the hex portion can be used to install a bleed valve

System Protection

- Remote shutoff capability
- Emergency shut-off in the event of fire: valve closes at 212°F / 100°C

Durability

- All Stainless steel construction
- Wrenching Hex to prevent damage when connecting or disconnecting
- Hardened Stainless steel threads to reduce wear

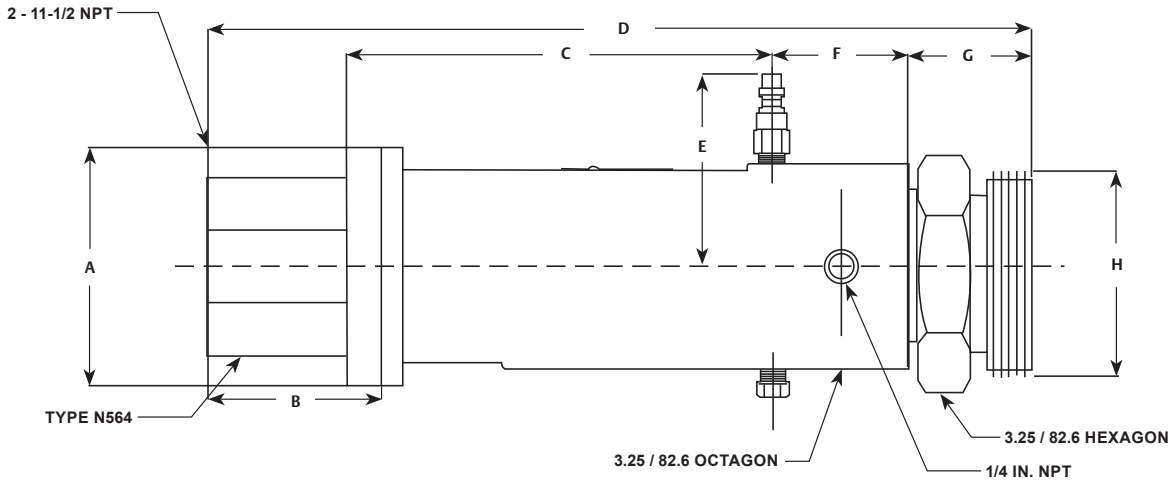

IN. / mm

TYPE N563/N564 DIMENSIONS

Types N563/N564 Dimensions							
In. / mm							
A	B	C	D	E	F	G	H
3.75 / 95.3	2.80 / 71.1	6.84 / 174	13.45 / 342	2.60 / 66.0	2.21 / 56.1	2.15 / 54.6	3.25 / 82.6 - 6NA ACME

Type N563 ESV is designed for higher flow needs. It flows up to 413 GPM / 1563 l/m to reduce loading/unloading time and provide faster railcar turnover.

Railcar High Flow Emergency Shutoff Valves				
TYPE	ELASTOMER	UL LISTED	INLET CONNECTION, IN.	OUTLET CONNECTION, IN.
N563-16	Nitrile (NBR)	Yes	2 FNPT	2 FNPT
N563-26				3-1/4 Male Acme
N863E-16	EPDM	No		2 FNPT
N863E-26				3-1/4 Male Acme
N863K-16	Kalrez®(1)			2 FNPT
N863K-26				3-1/4 Male Acme
N863N-16	Neoprene (CR)			2 FNPT
N863N-26				3-1/4 Male Acme
N863T-16	Teflon®(2)			2 FNPT
N863T-26				3-1/4 Male Acme
N863V-16	Viton®(3)			2 FNPT
N863V-26				3-1/4 Male Acme

Type N564 ESV integrates shutoff valve with an excess flow protection to automatically close if flow exceeds 210 GPM / 795 l/min propane at 14 psid / 0.97 bar d.

Railcar Emergency Shutoff Valves with Excess Flow				
TYPE	ELASTOMER	UL® LISTED	INLET CONNECTION, IN.	OUTLET CONNECTION, IN.
N564-16	Nitrile (NBR)	YES	2 FNPT	2 FNPT
N564-18				2-1/4 Male Acme
N564-26				3-1/4 Male Acme
N864K-16	Kalrez®(1)	NO		2 FNPT
N864K-18				2-1/4 Male Acme
N864K-26				3-1/4 Male Acme
N864V-16	Viton®(3)			2 FNPT
N864V-18				2-1/4 Male Acme
N864V-26				3-1/4 Male Acme

1. Perfluoroelastomer (FFKM) equivalent
2. PTFE equivalent
3. Fluorocarbon (FKM) equivalent



TYPE F138 | F100 SERIES | TYPE F130 | TYPE F134 | TYPE F190

Excess flow check valves are intended to close upon excessive discharge of vapor or liquid resulting from a break in the hose or piping system. They are used to protect cylinder, tank and piping systems and are available in a large variety of sizes and body configurations. Standard temperature rating is -20 to 160°F / -29 to 71°C.

When flow exceeds the valve's setting, the valve closes and remains closed until the system equalizes. A built-in equalizing passage automatically opens the valve once pressure on both sides of the poppet is equal. Valves larger than 1/2 in. NPT have a drill size No. 60. Valves with a 1/2 in. NPT and smaller have a limited bypass to comply with NFPA 58.

WARNING

A break or leak downstream of an excess flow valve, that does not allow a flow equal to the valve flow rating, will not actuate the valve and could cause a hazardous condition. For this reason, system operators should be familiar with the shutoff valves in the system so that necessary precautions can be taken in an emergency.

Care must be taken to be sure the valve's closing rate is less than the capacity of the LPG or Anhydrous Ammonia (NH_3) system in which the valve is installed. Brass valves are not suitable for Anhydrous Ammonia (NH_3) applications.

See the WARNING on page 50, if these excess flow valves are to be used on DOT Cargo Tanks.

UL® Approved Excess Flow Check Valves

TYPE	MATERIAL	APPLICATION	INLET CONNECTION, IN.	OUTLET CONNECTION, IN.	UL RATED CLOSING FLOW, PROPANE (HORIZONTAL POSITION)			DIFFERENTIAL PRESSURE, psid / bar d	WORKING PRESSURE, psig / bar
					Liquid GPM / l/min	Vapor SCFH / SCMH			
						25 psig / 1.7 bar Inlet	100 psig / 6.9 bar Inlet		
F138	Brass	In-Line	1/4 MNPT	1/4 FNPT	1.8 / 6.8	377 / 10.7	641 / 18.2	1.4 / 0.097	250 / 17.2
F202	Brass		Male POL	1/2 SAE Flare	1.9 / 7.2	634 / 17.9	1100 / 31.1	2.6 / 0.18	
F170	Brass	Tanks (Full or Half Coupling)	3/4 MNPT	3/4 FNPT	6.6 / 25.0	1184 / 33.5	2012 / 57.0	1.2 / 0.08	
F100	Brass				8.4 / 31.8	2010 / 56.9	3417 / 96.8	2.4 / 0.17	
F101	Brass				20 / 76.0	3459 / 97.9	5880 / 167	8.5 / 0.59	
F102	Brass		1-1/4 MNPT	1-1/4 FNPT	33 / 125	6300 / 178	10,630 / 301	10.7 / 0.74	
F105	Brass				55 / 208	9982 / 283	16,967 / 480	10.7 / 0.74	
F106	Brass		2 MNPT	2 FNPT	85 / 322	18,513 / 524	31,467 / 891	2.6 / 0.18	
F107	Brass				100 / 379	20,796 / 589	35,349 / 1001	3.6 / 0.25	
F130	Brass	In-Line	1 FNPT	1 FNPT	25 / 94.6	5287 / 150	8986 / 254	3.3 / 0.23	
F131	Brass		1-1/2 FNPT	1-1/2 FNPT	60 / 227	11,694 / 331	19,877 / 563	4.7 / 0.32	
F132	Brass		2 FNPT	2 FNPT	96 / 363	19,874 / 563	33,877 / 959	2.1 / 0.14	
F133	Brass				155 / 587	29,202 / 827	49,718 / 1408	4.2 / 0.29	
F134	Brass	Tanks (Full or Half Coupling)	1-1/2 MNPT x 1 FNPT	1 FNPT	28 / 106	5181 / 147	8806 / 249	2.7 / 0.19	
F135	Brass		2-1/2 MNPT x 1-1/2 FNPT	1-1/2 FNPT	60 / 227	12,000 / 340	20,290 / 575	5.2 / 0.35	
F190	Steel	Tanks[1] (Full or Half Coupling)	2 MNPT	2 MNPT x 1-1/4 FNPT	80 / 303	15,400 / 436	26,250 / 743	3.7 / 0.26	
F191	Steel				105 / 397	18,800 / 532	32,000 / 906	8.9 / 0.61	
F194	Steel		3 MNPT	2 MNPT	165 / 625	32,800 / 929	55,950 / 1584	3.1 / 0.21	
F195	Steel				260 / 984	50,650 / 1434	86,350 / 2445	6.9 / 0.48	
F198	Steel		3 MNPT	3 MNPT x 2 FNPT	165 / 625	33,000 / 934	56,250 / 1593	3.1 / 0.21	
F199	Steel				260 / 984	49,500 / 1402	84,350 / 2389	7.1 / 0.49	

1. LPG or NH_3 service.

Internal Relief Valves

Valves

FISHER





Relief Valves for Mobile Tanks and Transports

Primarily for trucks transporting LPG, Anhydrous Ammonia (NH_3) or other compressed gases.

Types H722, H733 and H5118 stainless steel relief valves resist rust and corrosion, including a 300 Series stainless steel spring for additional resistance to product contaminants. A thickly molded main seal improves service life and resistance to severe applications. Stainless steel makes it easy to remove the valve from the tank for periodic testing (as prescribed by DOT) and permits standard tank couplings instead of the more costly flanged tank openings. The Type H733 has an optional CL300 RF Flange connection. Standard product temperature rating is -20 to 160°F / -29 to 71°C.

Type H5118: Semi-Internal relief valve for 2 in. threaded recessed well-head connections on transports.

Tight fitting protective caps (Types P297, P298 and P299) are standard on the valve to ensure no debris blocks the valve discharge. Standard setpoints listed with UL for the Type H722 include 125, 156, 250, 265, 275 and 312 psig / 8.6, 10.8, 17.2, 18.3, 19.0 and 21.5 bar. Standard set points listed with UL for the Types H733 and H5118 include 250 and 265 psig / 17.2 and 18.3 bar.

All set points between 100 and 400 psig / 6.9 and 27.6 bar are available with ASME approvals. All Non-UL / ASME valve models MUST have their requested Set-Point for start-to-discharge (STD) declared on all orders.

A 1-1/2 and 2-1/2 in. hex size (Type P304 or P305) wrench can be inserted into the valve socket when installing/removing the valve to provide a means of attaching a standard wrench.

UL® Approved Internal Relief Valves

TYPE	CONTAINER CONNECTION, IN.	START-TO-DISCHARGE SETTING		FLOW CAPACITY, SCFM / SCMH AIR		FOR TANK WITH AREA UP TO[3]: Ft^2 / m^2	PROTECTIVE CAP (INCLUDED)
		psig	bar	UL	ASME		
H722-250	2 MNPT[1]	250	17.2	3635 / 6176	3203 / 5136	171 / 15.9	Type P297
H722-265		265	18.3	3556 / 6042	3386 / 5753	166 / 15.4	
H722-275		275	19.0	3714 / 6310	3508 / 5960	175 / 16.3	
H733-250	3 MNPT[2]	250	17.2	10,150 / 17,245	9369 / 15,918	598 / 55.6	Type P298
H733-265		265	18.3	10,940 / 18,587	9904 / 16,827	655 / 60.9	
H733F3-250	3 in. CL300 RF Flange	250	17.2	10,150 / 17,245	9369 / 15,918	598 / 55.6	Type P298
H733F3-265		265	18.3	10,940 / 18,587	9904 / 16,827	655 / 60.9	
H5118-250[4]	2 MNPT	250	17.2	10,530 / 17,891	9724 / 16,521	625 / 58.1	Type P299
H5118-265[4]		265	18.3	11,300 / 19,199	10,280 / 17,466	681 / 63.3	

1. Order Type P304 (1-1/2 in. hex bar) installation wrench.
2. Order Type P305 (2-1/2 in. hex bar) installation wrench.
3. Based on UL flow capacities.
4. Use with a 3.5 in. hex size installation tool.

Internal Relief Valves, ASME Rated Only (Non-UL)

TYPE	CONTAINER CONNECTION, IN.	SPRING RANGE[3], psig / bar	MATERIAL OPTION	ASME FLOW RATE FACTOR[4]
H823-1	2 MNPT[1]	100 to 150 / 6.9 to 10.3	**Standard** - Nitrile (NBR) E - EPDM[6] K - Kalrez® N - Neoprene (CR) V - Viton®	10.18
H823-2	2 MNPT[1]	151 to 250 / 10.4 to 17.2		
H823-3	2 MNPT[1]	251 to 400/ 17.3 to 27.6		
H833-1	3 MNPT[2]	100 to 149 / 6.9 to 10.3		29.77
H833-2	3 MNPT[2]	150 to 200 / 10.3 to 13.8		
H833-3	3 MNPT[2]	201 to 275 / 13.9 to 19.0		
H833-4	3 MNPT[2]	276 to 330 / 19.0 to 22.8		
H833-5	3 MNPT[2]	331 to 400 / 22.8 to 27.6		
H833F3-3	3 CL300 RF Flange	201 to 275 / 13.9 to 19.0		
H8118-3[5]	2 MNPT	201 to 275 / 13.9 to 19.0	**Standard** - Nitrile (NBR) N - Neoprene (CR)	30.90

1. Order Type P304 (1-1/2 in. hex bar) installation wrench.
2. Order Type P305 (2-1/2 in. hex bar) installation wrench.
3. ASME-Approved set points approved within these spring ranges.
4. ASME Flow Capacity (SCFM Air) = [Set Pressure (psig)*1.2+14.7]* ASME Flow Rate Factor.
5. Use with a 3.5 in. hex size installation tool.
6. 2 in. H823E-* in EPDM seal trim available up to 250 psi set-point; Types H823E-1 and H823E-2 only. 3" H833E-* available up to 400 psi set-point.

EMERSON



TYPE H284



TYPE H5114



TYPE P104-24

Relief Valves for Bulk Storage

Types H284 and H5114 internal spring relief valves can be used in the H500 Combo Joe™ relief valve manifold or as separate units on stationary tanks. The valves are identical except for valve body materials – Type H284 of brass (LPG service) and Type H5114 of 316 Stainless steel (Anhydrous Ammonia (NH_3) or LPG service). All other components are stainless steel, including a 300 Series Stainless steel spring for additional resistance to product contaminants. A thickly molded main seal improves service life and resistance to severe applications. Flow area is 3.20 sq. in. Standard product temperature rating is -20 to 160°F / -29 to 71°C.

When used in ASME tanks, internal spring relief valves have only the poppet and part of the body outside the tank. The adjusting screw and all other parts are inside the tank, safe from tampering. Standard setpoints listed with UL for the Type H284 includes 225 and 250 psig / 15.5 and 17.2 bar. Standard setpoints listed with UL for the Type H5114 includes 250 and 265 psig / 17.2 and 18.3 bar. All set points between 100 and 400 psig / 6.9 and 27.6 bar are available with ASME approvals.

Outlet is 3 in. NPT for discharge stack connection. Type P104-24 pipe away adaptor (3 in. FNPT) is available for use with either valve. A 3-1/2 in. wrench can be used when installing or removing the valve. The drain deflector is furnished as standard on both the Types H284 and H5114. The Type P299 Rain Cap ships standard with each valve.

UL® Approved Types H284 and H5114 Large Stationary Tank Relief Valves

TYPE[1]	CONTAINER CONNECTION, IN.	SERVICE	CONSTRUCTION MATERIAL	START-TO-DISCHARGE SETTING, psig / bar	FLOW CAPACITY, SCFM / SCMH AIR		FOR TANK WITH AREA UP TO[2]: Ft^2 / m^2
					UL	ASME	
H284-225	2 MNPT	LPG	Brass	225 / 15.5	9835 / 16,710	8797 / 14,946	575 / 53.4
H284-250				250 / 17.2	10,530 / 17,891	9724 / 16,521	625 / 58.1
H5114-250		NH_3 or LPG	Stainless Steel	250 / 17.2	10,530 / 17,891	9724 / 16,521	625 / 58.1
H5114-265				265 / 18.3	11,300 / 19,199	10,280 / 17,466	681 / 63.3

1. Use with a 3.5 in. hex size installation tool.
2. Based on UL flow capacities.

Types H884 and H8114 Special Service Large Stationary Tank Relief Valves

TYPE	SPRING RANGE[2], psig / bar	CONTAINER CONNECTION, IN.	MATERIAL OPTION	ASME FLOW RATE FACTOR[3]
H884-1	100 to 149 / 6.9 to 10.3	2 MNPT x 3 MNPT[1]	**Standard** - Nitrile (NBR) E - EPDM K - Kalrez® N - Neoprene (CR) V - Viton®	30.90
H884-2	150 to 200 / 10.3 to 13.8			
H884-3	201 to 275 / 13.9 to 19.0			
H884-4	276 to 330 / 19.0 to 22.8			
H884-5	331 to 400 / 22.8 to 27.6			
H8114-1	100 to 149 / 6.9 to 10.3			
H8114-2	150 to 200 / 10.3 to 13.8			
H8114-3	201 to 275 / 13.9 to 19.0			
H8114-4	276 to 300 / 19.0 to 22.8			
H8114-5	331 to 400 / 22.8 to 27.6			

1. Use with a 3.5 in. hex size installation tool.
2. ASME-Approved set points approved within these spring ranges.
3. ASME Flow Capacity (SCFM Air) = [Set Pressure (psig)*1.2+14.7]* ASME Flow Rate Factor.

Bulk Plant Relief Valves

Valves

FISHER



TYPE 63EGLP-16, 2 NPT



TYPE 63EGLP, NPS4 / DN 100 CL300 RF

UL® LISTED FOR LPG

Innovative dual pilot-operated technology for overpressure protection of your liquid petroleum (propane, butane, etc.) and natural gas liquids stationary storage tanks.



Specifications

Tank Connection: 2 NPT and NPS 4 / DN 100 CL300 RF
- Available in 3 in. with 4x3 in. flange reducer*
Max Relief Inlet Pressure: 400 psig / 27.6 bar
Flow Characteristic: Linear
Temperature Capabilities: -20 to 180°F / -29 to 82°C
Approximate Weight: 2 NPT - 45 lbs / 20.5 kg
NPS 4 / DN 100 CL300 RF - 178 lbs / 80.7 kg
Main Valve Port Diameter: 2 NPT - 2.38 in. / 60 mm
NPS 4 / DN 100 CL300 RF - 4.38 in. / 111 mm
Valve Plug Travel: 2 NPT - 1.13 in. / 29 mm
NPS 4 / DN 100 CL300 RF - 2 in. / 51 mm
Included: UV resistant rain cap and load-rated lifting sling

Materials

Body: WCB Steel
Pilot Construction and Tubing: Stainless steel
Body O-rings and Upper Seals: Nitrile (NBR)
Pilot Elastomer: Nitrile (NBR)
Piston Ring: Polytetrafluoethylene (PTFE)
Trim: Hardened 416 stainless steel valve plug and seat ring
Linear Cage: Electroless Nickel Coated (ENC) CF8M stainless steel

EMERSON

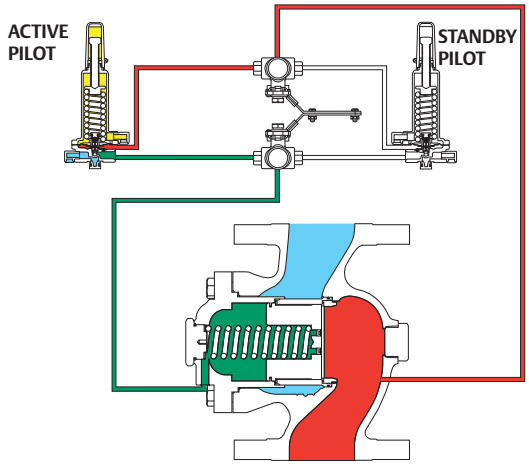

TYPE 63EGLP AT NORMAL CONDITION
(BOTH MAIN VALVE AND ACTIVE PILOT ARE CLOSED)

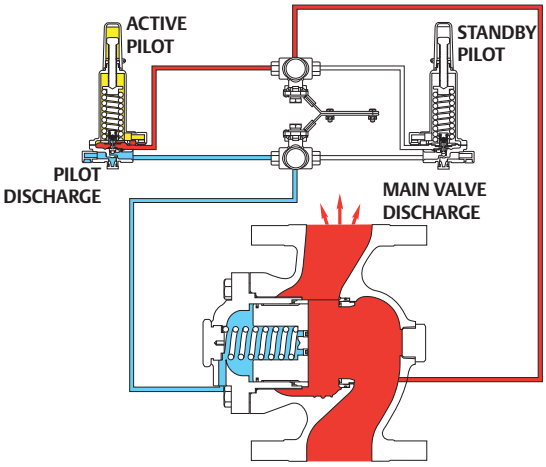

TYPE 63EGLP AT OVERPRESSURE CONDITION
(ACTIVE PILOT DISCHARGES LOADING PRESSURE, MAIN VALVE DISCHARGES EXCESS INLET PRESSURE)

Type 63EGLP Bulk Plant Relief Valves, NPS 4 / DN 100 CL300 RF

TYPE NUMBER[1]	DISCHARGE SET PRESSURE		REPLACEMENT PILOT TYPE	LISTING / APPROVAL	FLOW RATE, AIR	
	psig	bar			SCFM	SCMM
63EGLP-250	250	17.2	6358EBLP-250	UL and ASME Sect VIII, Div. I	38,794[2]	1099[2]
63EGLP-EB1	85 to 140	5.9 to 9.7	6358EBLP-1	ASME Section VIII, Div. I	13,045 to 51,944[3]	369 to 1471[3]
63EGLP-EB2	130 to 200	9.0 to 13.8	6358EBLP-2			
63EGLP-EB3	180 to 350	12.4 to 24.1	6358EBLP-3			
63EGLP-EBH	250 to 375	17.2 to 26.0	6358EBHLP			

1. All are NPS 4 / DN 100 CL300 Flange connections. For NPS 3 / DN 80 flanged connection, a NPS 4 x 3 / DN 100 x 80 flange reducer, ERAA07058A0 is available.
2. Capacity based on 20% over set pressure, UL-32 Standard.
3. Capacity based on 20% over set pressure. ASME Flow Rate (SCFM Air) = 111.78 x [(Set Pressure (psig) x 1.2) + 14.7].

Type 63EGLP-16 Bulk Plant Relief Valves, 2 NPT

TYPE NUMBER[1]	DISCHARGE SET PRESSURE		REPLACEMENT PILOT VALVE TYPE	LISTING / APPROVAL	FLOW RATE, AIR	
	psig	bar			SCFM	SCMM
63EGLP-16-250	250	17.2	6358EBLP-250	UL and ASME Sect VIII, Div. I	10,540[2]	298
63EGLP-16-EB1	85 to 140	5.9 to 9.7	6358EBLP-1	ASME Section VIII, Div. I	3,709 to 14,768[3]	105 to 418[3]
63EGLP-16-EB2	130 to 200	9.0 to13.8	6358EBLP-2			
63EGLP-16-EB3	180 to 350	12.4 to 24.1	6358EBLP-3			
63EGLP-16-EBH	250 to 375	17.2 to 26.0	6358EBHLP			

1. All are 2 NPT units with male union coupling included for inlet connection during installation.
2. Capacity based on 20% over set pressure, UL-132 Standard.
3. Capacity based on 20% over set pressure. ASME Flow Rate (SCFM Air) = 31.78 x [(Set Pressure (psig) x 1.2) + 14.7] .

63EGLP Series Relief Valves

Fisher™ Type 63EGLP relief valve provides superior overpressure protection for large bulk plant applications. Available in steel and stainless steel constructions for LPG and other compressed gas applications. Bringing advanced technology from the petrochemical industry, the Type 63EGLP provides precise and controlled pressure relief in an emergency situation to protect your pressure vessel while simultaneously limiting the amount of product discharged to the atmosphere.

Tight fitting UV resistant caps are standard on all constructions, along with a load-rated lifting sling to assist with lifting and installation. End connections are standard 2 NPT or NPS 4 / DN 100 CL300 RF bolt patterns. Fisher Type 63EGLP relief valve provides the industry with the most advanced relief technologies. The accuracy and repeatability of pilot-operated pressure regulation excercises precise control during relief situations without relying on last-generation pop-style relief mechanics.

The Fisher Type 63EGLP is the evolutionary leap forward in bulk plant pressure relief combining safety, durability and serviceability into one superior package.

Type 63EGLP-250 is UL listed for propane (LPG) at 250 psig / 17.2 bar. For other model types and set-point ranges, ASME Section VIII is also available for set points of 85 to 375 psig / 5.7 to 25.9 bar. The flow port diameter is 4.38 in. / 111 mm and the plug travel height is 2.0 in./ 51 mm.

Type 63EGLP-16 is UL listed for propane (LPG) at 250 psig / 17.2 bar. For other model types and set-point ranges, ASME Section VIII is also available for set points of 85 to 375 psig / 5.7 to 25.9 bar. The flow port diameter is 2.38 in. / 60 mm and the plug travel height is 1.13 in. / 29 mm.

For the NPS 4 / DN 100 CL300 RF version, main body gasket and studs and bolts are not included but can be ordered separately, see Instruction Manual D450321T012.

Type 63EGLP NPS 4 / DN 100 CL300 RF, Number of Valves Required/Surface Area[1]	
Number of Type 63EGLP	**Surface Area, ft²**
1	Up to 3069
2	3070 to 7147
3	7148 to 77, 718
4	11, 719 to 21, 847
1. Based on 38, 794 CFM air at 20% over 250 psig set pressure. Please contact Emerson for other set points.	

Type 63EGLP NPS 4 / DN 100 CL300 RF, Number of Valves Required/Surface Area[1]			
Tank Size, Gal / L	**Fisher Type 63EGLP**	**RegO® A8574G**	**MEC™ ME904S-4F**
30,000 / 113, 562	1	1	1
45, 000 / 170, 344	1	2	2
60, 000 / 227, 125	2	2	2
90, 000 / 340, 687	2	2	2
120, 000 / 454, 250	2	3	3
1. Recommended values for standard above ground tanks, based on 250 psig set point. Actual relief capacity/surface area must be calculated by user.			

Higher relief capacity and lower maintenance than multi-port relief

Reduced Maintenance and Ease of Use

- Dual Pilot technology allows removal of a pilot for testing and setpoint validation while Type 63EGLP continue to protect tank's contents.
- Stainless steel internal valve plug, seat ring and orifice cage offer corrosion resistance for all internal moving parts and sealing components.

Lower Installation Cost (Type 63EGLP, NPS 4 / DN 100 CL300 RF)

- 33% greater surface area protection reduces number of relief valves/tank.
- Compact profile and 60 lbs / 27 kg lighter reduces installation time.
- Lifting strap included.

Better Performance (Type 63EGLP, NPS 4 / DN 100 CL300 RF)

- 40% greater relief capacity - flows 38, 794 SCFM air (versus 28, 000 SCFM).
- Precise and tighter controlled tank pressure relief with the pilot design.
- Pilots allow relief of small pressure build-ups instead of a full discharge from the main valve. This is ideal for high temperature sites.
- Main spring made from chromium-silicon alloy steel for wide temperature range.

More Reliability

- 30+ field proven years with harsh hydrocarbon and petrochemical applications.
- Balanced seat design minimizes stress on main spring and increases service life on main seal.
- Pilot spring is in atmosphere instead of in product, minimizing chance for harsh chemicals to attack spring under compression.
- Durable steel (instead of ductile iron) body and all stainless steel tubing and pilot regulators for corrosion resistance.

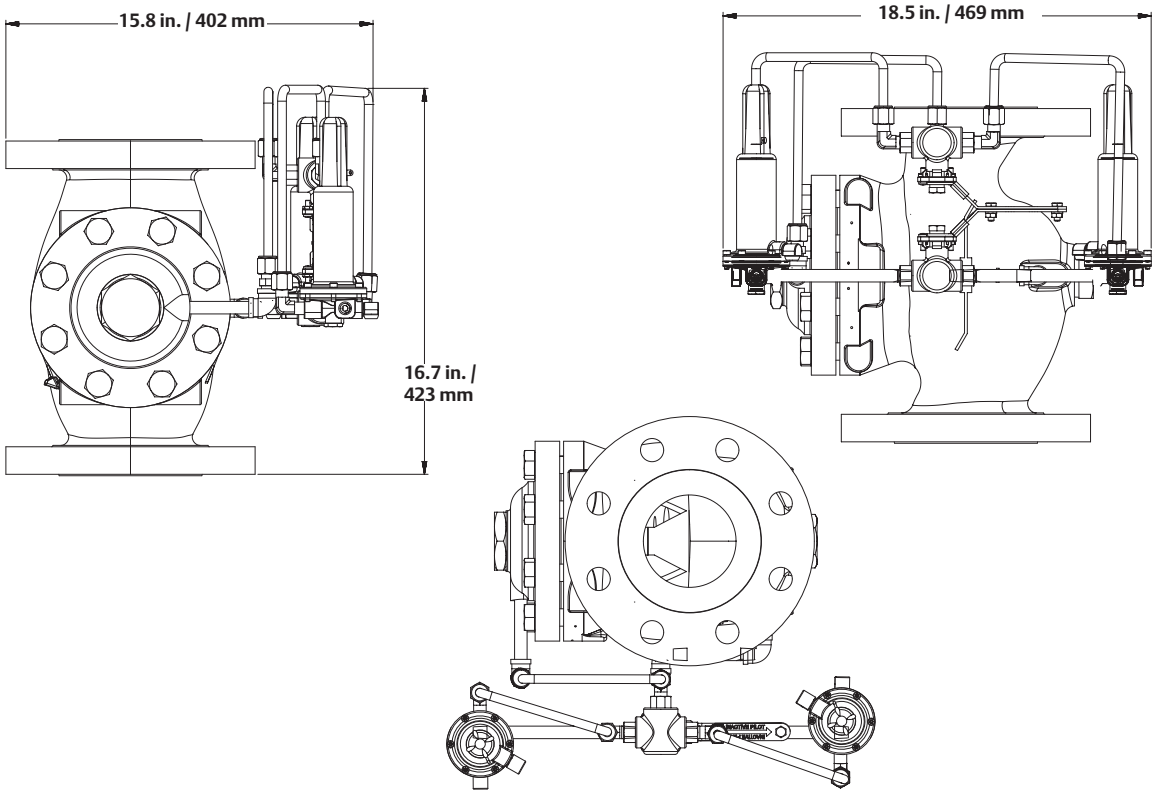

TYPE 63EGLP, NPS 4 / DN 100 CL300 RF

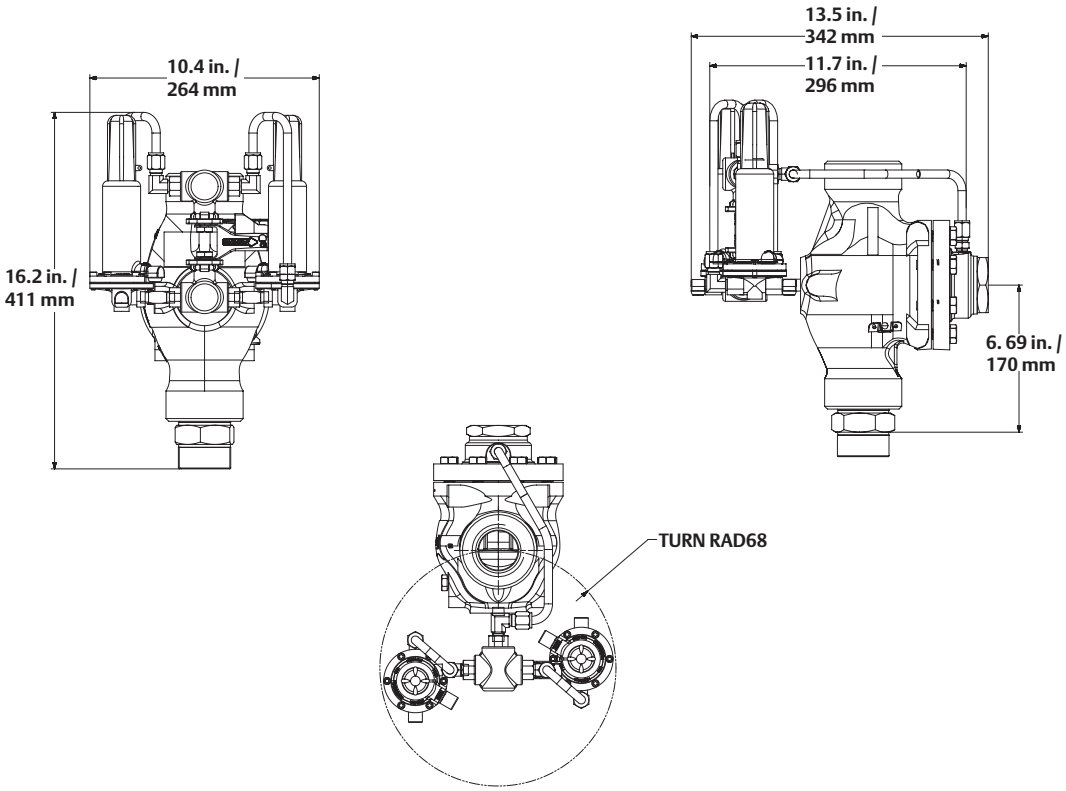

TYPE 63EGLP-16, 2 NPT


TYPE H100


TYPE P206


TYPE P174


TYPE H173


TYPE H185

External Relief Valves

Typically used as hydrostatic relief, or on smaller ASME tanks or DOT containers. All working parts of these valves are outside the container connection so they must be protected against mechanical damage(1).

The external relief valves use Brass as material of construction. Standard product temperature rating is -20 to 160°F / -29 to 71°C.

Protective caps are shipped with Fisher™ external relief valves. Replacement caps may be ordered separately (refer below).

Small External Relief Valves

TYPE	CONTAINER CONNECTION, IN.	START-TO-DISCHARGE PRESSURE		PRESSURE PLUS BUILDUP		FLOW CAPACITY, SCFM / SCMH AIR	ACCESSORY	
		psig	bar	psig	bar		Pipeaway Adaptor	Protective Cap
H110-250(1)	1/4 MNPT	250	17.2	----	----	310 / 527	----	P206
H125-250	1/2 MNPT					610 / 1036		----
H135-250(1)						594 / 1009	P174(3)	
H150-250	3/4 MNPT					580 / 985	----	
H160-250(1)						605 / 1028		
H185-250(1)						2223 / 3777		P145
H185-275(1)		275	19.0			2456 / 4173		
H110-312(1)	1/4 MNPT	312	21.5			390 / 663		P206
H135-312(1)	1/2 MNPT					765 / 1300	P174(3)	----
H160-312	3/4 MNPT						----	
H123(1)	1/4 MNPT	375	25.9			----		P206
H148(1)	1/2 MNPT					903 / 1534(2)	P174(3)	
H173(1)	3/4 MNPT							
H120-35	1/4 MNPT	35	2.4	60	4.1	77 / 131	----	
H120-60		60	4.1	85	5.9	105 / 178		
H120-120		120	8.3	145	10	165 / 281		
H120-150		150	10.3	180	12	191 / 325		
H120-175		175	12.1	210	14	224 / 380		
H120-200		200	13.8	240	17	262 / 445		
H120-225		225	15.5	270	19	280 / 476		
H120-275		275	19.0	330	23	303 / 515		
H120-350		350	24.1	420	29	445 / 756		
H124(1)		450	31.0	----	----	----	----	
H144(1)	1/2 MNPT							
H174(1)	3/4 MNPT							

1. Listed under UL® Section 132.
2. DOT cylinder water capacity 500 lbs / 227 kg, approved by Bureau of Explosives and CGA.
3. 1/2 in. FNPT.

1. These hydrostatic relief valves are not ASME rated nor ASME approved. Check local codes and regulations for applicable use.



TYPE N310
GLOBE VALVE



TYPE N410 ANGLE
VALVE



TYPE N350 ANGLE
VALVE



TYPE N450
ANGLE VALVE

Globe and angle valves are widely used at bulk plants to control gas flow in the piping system, at storage tanks, on trucks and at pumps or compressors. Their body configuration permits installation in a straight section of pipe (globe body) or where it is desired to make a change in piping direction (angle body).

All units have a 1/4 in. FNPT plugged boss in the downstream side of the body. A hydrostatic relief valve (Type H124) or a vent valve (Type J402S) can be installed in this outlet.

Heavy-duty ductile iron (DI A395) valves for either LPG or Anhydrous Ammonia (NH_3) service. Ranging in size from 1/2 to 2 in. FNPT, each valve has spring loaded PTFE chevron packing for an effective seal against leakage. The valves are rated for 400 psig / 27.6 bar WOG and a standard temperature rating of -20 to 160°F / -29 to 71°C.

Valve disc rotation stops as soon as the disc contacts the body seat to help minimize disc wear. Oversize ports in all units give high flow capacity.

Types N310 and N410 – Heavy-duty ductile iron valves for either LPG or Anhydrous Ammonia (NH_3) service. Ranging in size from 1/2 to 2 in. FNPT each valve has spring loaded PTFE chevron packing for sealing against leakage. Ball bearing valve disc construction on 1-1/4 in. / DN 32 and larger sizes, gives a strong connection to the stem to protect the disc under back-flow conditions.

Types N350 and N450 – Economy globe and angle valves for LPG service. With many of the construction features of the Types N310 and N410, these valves can be supplied in 1/2 and 3/4 in. / DN 15 to 80 sizes. PTFE spring-loaded packing provides an effective seal against leakage within the valve's pressure range.

Globe and Angle Valves

SERVICE	INLET AND OUTLET CONNECTION, IN. / DN	TYPE			
		Heavy-Duty Version		Economy Version	
		Globe	Angle	Globe	Angle
LPG and NH_3	1/2 FNPT	N301-04	N401-04	----	----
	3/4 FNPT	N301-06	N401-06	----	----
	1 FNPT	N301-08	N401-08	----	----
	1-1/4 FNPT	N310-10	N410-10	----	----
	1-1/2 FNPT	N310-12	N410-12	----	----
	2 FNPT	N310-16	N410-16	----	----
	3 FNPT	N310-24	N410-24	----	----
	NPS 3 / DN 80 CL300 Flange	N310F-24	N410F-24	----	----
LPG	1/2 FNPT	----	----	N350-04	N450-04
	3/4 FNPT	----	----	N350-06	N450-06



G100 SERIES



TYPE G105

Back check valves allow flow in only one direction and are normally closed. They are installed in liquid filling connections on stationary storage tanks, bobtail delivery trucks and liquid transfer lines.

G100 Series

G100 Series – used mainly in tank inlet connections, are offered in two styles of seat construction: metal-to-metal or soft seat. The soft seated construction is for the filling connection on bobtail delivery trucks. Because the valve gives tight shutoff, piping on the bobtail can be depressurized for maintenance or repair without leakage. The G100 Series has a 250 psi / 17.2 bar rating and bubbles at 0.25 psid / 17 mbar d. Standard product temperature rating is -20 to 160°F / -29 to 71°C.

Type G109 – was designed for in-line service at bulk plants with FNPT connections for easy installations.

G100 Series Back Check Valves

SEAT CONSTRUCTION	CONTAINER OR INLET CONNECTION, IN.	OUTLET CONNECTION, IN.	PROPANE FLOW CAPACITY AT 10 psig / 0.69 bar DIFFERENTIAL PRESSURE		TYPE	
			GPM	l/min	Brass	Steel[1]
Metal-to-Metal	3/4 MNPT	3/4 FNPT	21	79.5	G100	----
	1-1/4 MNPT	1-1/4 FNPT	55	208	G101	----
	2 MNPT	2 FNPT	150	568	G102	G112
	2 FNPT	2 FNPT	150	568	G109	----
	3 MNPT	3 FNPT	250	946	----	G104
Soft Seat	2 MNPT	2 MNPT and 1-1/4 FNPT	137.5	520	----	G105
	3 FNPT	2 MNPT	254	961	----	G106
	3 MNPT	3 MNPT and 2 FNPT	254	961	----	G107

1. See Instruction Manual or contact Application Engineering support for specific materials. Some Body materials are Ductile Iron (DI) as marked.

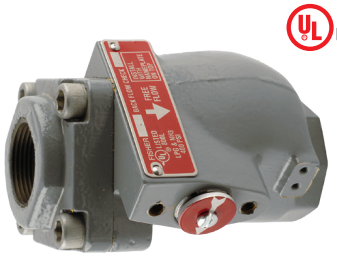

TYPE G201

Specifications

Types G200 and G201

Pressure Rating: 400 psig / 28 bar WOG
Temperature Rating: -20 to 160°F / -29 to 71°C
Body: Ductile iron
Internal Parts: Plated steel or stainless steel
Seat Disc: Synthetic rubber with metal-to-metal backup

G200 Series

G200 Series – back check valves are specifically intended for heavy-duty in-line service at the bulk plant's transfer area. The valves are suitable for LPG or Anhydrous Ammonia (NH_3) service.

Flow moves the spring loaded poppet to the open position as soon as pressure differential is created. When flow stops, the poppet closes. A soft seat construction gives tight shutoff so that piping can be blown down for maintenance.

With a body designed to reduce flow resistance, flow capacity is high. The 2 in. / DN 50 body size gives 350 GPM / 1325 l/min LPG at 10 psig / 0.69 bar differential pressure.

The G200 Series is built to stay on the job with all internal parts of plated steel or stainless steel.

Type G201 – has a built-in flow indicator mechanism, (see illustration), which can be used to replace sight flow indicators.

G200 Series Back Check Valves

SEAT CONSTRUCTION	CONTAINER OR INLET AND OUTLET CONNECTION, IN.	PROPANE FLOW CAPACITY AT 10 psig / 0.69 bar DIFFERENTIAL PRESSURE		TYPE	
				Ductile Iron	
		GPM	l/min	No Flow Indicator	Flow Indicator
Soft Seat	1-1/4 FNPT	190	719	G200-10	G201-10
	2 FNPT	350	1325	G200-16	G201-16
	3 FNPT	800	3028	G200-24	G201-24

Hose End, Filler and Liquid Transfer Valves

Valves

Hose End Valves

Type N480 – hose end valves are intended for quick opening and closing during bobtail truck deliveries of LPG or Anhydrous Ammonia (NH_3). The unique design prevents opening unless attached to a 1-3/4 in. ACME filler valve at the tank. The 45° angle body configuration with 1 in. NPT inlet gives maximum handling ease during the transfer operation. Standard product temperature rating is -20 to 160°F / -29 to 71°C.

For increased safety, the Type N480 is designed to stay closed unless connected even with the operating lever in the open position. This prevents accidental opening during hose reel-up or at other times. The fluted coupler permits quick attachment to the filler valve and the operating lever is easy to reach for opening or closing.

Type M570 – filler hose adaptor, included with the Type N480, permits the hose end valve to be removed from filler valves that fail to close. Standard product temperature rating is -20 to 160°F / -29 to 71°C.

Type N481 – hose end valves without the Type M570 filler hose adaptor can be supplied for Anhydrous Ammonia (NH_3) applications. Standard product temperature rating is -20 to 160°F / -29 to 71°C.

Caution: Other brands of filler hose adaptors should not be used with the Type N480 because they could allow accidental opening of the valve while it is being handled.

Large Filler Valves

Emerson offers large filler valves with heavy-duty construction throughout for rapid filling of ASME tanks or trucks. Thick-walled bodies, formed seat retainers and generous wrenching flats minimize damage to internal parts. The flow channel design offers low resistance-to-flow for increased pump and hose service. Standard product temperature rating is -20 to 160°F / -29 to 71°C.

Types D138 and D139 – offer single back check valves for use with either a supplementary G Series back check valve or a manual shutoff valve.

Types D140 and D141 – provide a two-piece design with both an upper and lower back check. The bubble tight upper back check has a resilient seat for maximum service life. A metal-to-metal lower back check protects against loss of product in case of an accident and permits removal of the upper body with the tank under pressure.

Liquid Transfer Valves

The Type N456 attaches to a liquid withdrawal valve or similar constructions. The withdrawal valve is activated by means of a special adaptor on the Type N456 that opens the valve the correct distance to permit liquid transfer from the customer tank to the storage tank. Standard product temperature rating is -20 to 160°F / -29 to 71°C.

Type N456 – Special 3/4 in. MNPT inlet x 1-3/4 in. male ACME outlet. Consists of a Type N450-06 angle valve, a Type M455 inlet adaptor, a Type M215 outlet adaptor and a cap and chain to keep dirt from entering the valve when it is not in use.

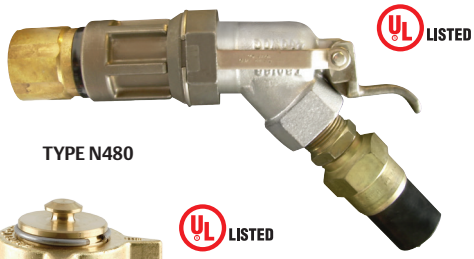

TYPE N480



TYPE D140 OR D141



TYPE D138 OR D139

Large Filler Valves

TYPE	CONNECTIONS CONTAINER MNPT x LINE ACME	BACK CHECK STYLE	FILLING CAPACITY GPM / l/min PROPANE AT 10 psi / 0.69 bar DIFFERENTIAL
D138	2 x 2-1/4 in.	Single	105 / 397
D140		Double	100 / 379
D139	3 x 3-1/4 in.	Single	275 / 1041
D141		Double	225 / 852



TYPE M455



TYPE N456

Type M455 – Special 3/4 in. MNPT inlet x 3/4 in. MNPT outlet. Opens the tank's liquid withdrawal valve the correct distance to permit transfer operations. A Nylon (PA) gasket is supplied for a tight seal with the withdrawal valve.

Types N456 and M455 should be used with Types F171* and F210* Liquid Withdrawal Valves.

*Types F171 and F210 valves are obsolete Fisher™ products. Kindly contact your LPG Equipment Distributor for a suitable replacement.

Bypass Valves for Large Pumps

Designed for bypass on 2 to 4 in. size pumps, the N100 Series is widely used on both LPG and Anhydrous Ammonia (NH_3) applications. The throttling action of the N100 Series allows only surplus pump discharge to be returned to the tank.

A venturi flow passage gives a boost effect, permitting a greater valve opening for increased flow at the lower pressure build-ups when bypassing full pump output. These features help to give rapid, stable liquid transfer and reduce dangerous pressure pulsations. The valves contain only one moving part - the piston style inner valve.

An external sensing line is not required because tank pressure registers through a hole in the inner valve. Complete field servicing can be made without removing the valve from the piping.

All N100 Series bodies have a 1/4 in. FNPT tapped and plugged boss on the side inlet for either a pressure gauge or a hydrostatic relief valve and have a temperature rating of -20 to 160°F / -29 to 71°C.



N100 SERIES

Large Pump Bypass Valves

TYPE	PUMP SIZE, IN.	BODY SIZE, IN.	PSID SETTING		PSID RANGE	
			psig	bar	psig	bar
N100A-08-1[1]	2	1 FNPT	50	3.4	25 to 75	1.7 to 5.2
N100A-08-2[1]			115	7.9	50 to 150	3.4 to 10.3
N100A-10-1[1]	2 or 3	1-1/4 FNPT	50	3.4	25 to 75	1.7 to 5.2
N100A-10-2[1]			115	7.9	50 to 150	3.4 to 10.3
N100A-12-1[1]		1-1/2 FNPT	50	3.4	25 to 75	1.7 to 5.2
N100A-12-2[1]			115	7.9	50 to 150	3.4 to 10.3
N100-16-1	4	2 FNPT	50	3.4	25 to 75	1.7 to 5.2
N100-16-2		2 FNPT	115	7.9	50 to 150	3.4 to 10.3

1. Only the Type N100As are UL® listed.

Bypass Valves for Small Pumps

N110 Series – is intended for bypass service on the smaller pumps (5 to 40 GPM / 18.9 to 151 l/min) used on stationary tanks or delivery trucks. Suitable for LPG or Anhydrous Ammonia (NH_3) installations, the valve has an internal sensing orifice and does not require an external sensing line. Standard product temperature rating is -20 to 160°F / -29 to 71°C. A vent opening of the sensing orifice channel allows trapped vapor to escape, eliminating any vapor in the system when the pump is started. The compact size of the N110 Series (less than 6.5 in. / 165 mm overall) permits installation in limited space. A 1/4 in. FNPT tapped and plugged boss on the inlet side of the body can be used to install a hydrostatic relief valve or a pressure gauge. The valve does not have to be removed from the line for servicing; all internal parts can be reached by unscrewing the union nut.



N110 SERIES

Small Pump Bypass Valves

TYPE	PUMPING CAPACITY		BODY SIZE, IN.	PSID SETTING		PSID RANGE	
	GPM	l/min		psig	bar	psig	bar
N110-06-1	5 to 20	18.9 to 75.7	3/4 FNPT	50	3.4	25 to 75	1.7 to 5.2
N110-08-1	20 to 40	75.7 to 151	1 FNPT				
N110-06-2	5 to 20	18.9 to 75.7	3/4 FNPT	100	6.9	75 to 150	5.2 to 10.3
N110-08-2	20 to 40	75.7 to 151	1 FNPT				

Backpressure Valves

These valves are soft seated, holding a differential backpressure on liquid meters. A N120 Series backpressure valve is installed after the meter and it holds backpressure on the meter until vapor is forced back to the tank through the vapor eliminator. Standard product temperature rating is -20 to 160°F / -29 to 71°C. In this way vapor cannot form within the meter during liquid delivery.

Intended for smaller pumps, N120 Series are ideal on such applications as cylinder filling installations. All units have a 1/4 in. FNPT tapped and plugged boss on the inlet side of body and can be used for both LPG and Anhydrous Ammonia (NH_3) service. The N120 Series has a 1/4 in. FNPT connection in the closing cap for attachment of an external sensing line from the tank vapor space or vapor eliminator.



N120 SERIES

Backpressure Valves

TYPE	LIQUID METER SIZE, IN.	BODY SIZE, IN.	PSID SETTING		PSID RANGE	
			psig	bar	psig	bar
N120-06-3	3/4 or 1	3/4 FNPT	12	0.83	10 to 20	0.69 to 1.4
N120-08-3		1 FNPT				



TYPES P323 AND P324

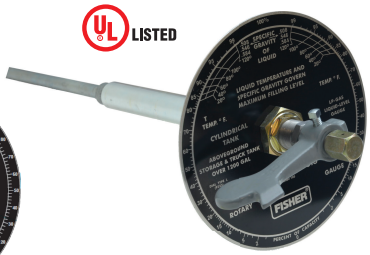

TYPE J-31



TYPE J415-1



TYPE J415

Rotary Gauges

Fisher™ rotary gauges can be used on stationary or mobile tanks to visually indicate the amount of LPG or Anhydrous Ammonia (NH_3) in the container. They are also used in filling the tank to the proper liquid level. On mobile applications and some large stationary storage tanks, hangers are recommended to support the horizontal length of the dip tube.

The gauge is operated by opening the small bleed orifice when the tube is in the vapor space of the tank. Moving the pointer on the dial causes the end of the tube to move until it contacts liquid in the container. At that point, discharge from the bleed orifice turns from vapor to liquid and the rotary gauge dial gives the volume percentage of liquid in the tank.

Type J-31 – consists of heavy duty gauges that minimize vibration effects (swaying, bouncing) by a long (68 in. / 1.73 m) stem tube extension. Gauges fit 1 in. / 25.4 mm coupling container connections.

All gauges have stem and dip tubes with an extra large inside diameter. This assures that the correct liquid level can be obtained quickly.

A Nylon (PA) packing sleeve and a friction ring for the pointer indicator gives smooth rotation and long service life. Steel and stainless steel materials resist rust or corrosion. Standard product temperature rating is -20 to 160°F / -29 to 71°C.

Rotary Gauges

LENGTH, IN. / mm	LPG DIAL >1200 GALLON(1)	LPG DIAL ≤1200 GALLON	NH_3 DIAL >1200 GALLON(1)	NO DIAL >1200 GALLON
68 / 1727	Type J31L-1	Type J31S-1	Type J31A-1	Type J31X-1
69 to 92 / 1753 to 2337	Type J31L-2	Type J31S-2	Type J31A-2	Type J31X-2
93 to 108 / 2362 to 2743	Type J31L-3	Type J31S-3	Type J31A-3	----
109 to 140 / 2769 to 3556	Type J31L-3L	Type J31S-3L	Type J31A-3L	Type J31X-3L
Dial Only	Type P323	Type P322	Type P324	----

1. The Type P323 for LPG and Type P324 for NH_3, now consist of the exact same Dial part with both scales on the same dial. Effectively Type J31L is the same as Type J31A, due to both utilizing same the same Dial.

Liquid Level Vent Valves

Type J415 – with steel construction, can be used on either LPG or Anhydrous Ammonia (NH_3) service. They can also be installed on large bulk storage tanks at the maximum filling level. Standard valve comes with a 3/4 in. MNPT container connection and two 1/4 in. FNPT side outlets. Standard product temperature rating is -20 to 160°F / -29 to 71°C.

Type J415-1 – features the addition of a Type J402S liquid level vent valve and Type J542 (0 to 400 psig / 0 to 27.6 bar) pressure gauge installed.



TYPE J402S



TYPE J403S

Vent Valves and Fixed Maximum Liquid Level Gauges

Used in all kinds of LPG containers to give positive visual indication of liquid reaching the maximum allowable liquid level. Standard product temperature rating is -20 to 160°F / -29 to 71°C.

Types J402S and J403S do not have dip tubes and must be used in containers where a dip tube has been welded in. Stainless steel constructions are for corrosive service.



TYPES J700 , J701 OR J702S

Container Thermometers

Suitable for any size tank in LPG and Anhydrous Ammonia (NH_3) service, the 2 in. / 51 mm diameter dial reads from -40 to 120°F / -40 to 49°C. They are dustproof and waterproof. Specify J700 Series for a 1/2 in. MNPT by a 4 in. / 102 mm length or Type J701 for a 1/2 in. MNPT by 6 in. / 152 mm length. Type J702S is 1/2 in. MNPT with 2 in. / 51 mm dial and 3 in. / 76 mm stem length and range of -80 to 120°F / -60 to 50°C.

All Thermometers are per ASME B40.1 standard.





TYPE M390

Female ACME Filler Couplings

These couplings allow connection of ACME threads to NPT. One side is 1-1/4 through 4-1/4 in. female ACME. The other side is 3/8 through 3 in. NPT. Available in brass or steel. Standard product temperature rating is -20 to 160°F / -29 to 71°C.

Female ACME Filler Couplings

FEMALE ACME, IN.	OTHER CONNECTION, IN.	LENGTH, IN. / mm		TYPE	
				Brass	Steel
1-3/4	1/2 MNPT	3 / 76	1	M110	----
	3/4 MNPT	3 / 76	1	M111	M631-6
		6-1/8 / 156	2	----	M635-6
	1 MNPT	3 / 76	1	M112	M631-8
		7 / 178	2	----	M635-8
2-1/4	1-1/4 MNPT	3-1/4 / 83	3	M120(1)	M121
3-1/4	1-1/4 FNPT	1-1/2 / 38	4	M442	----
	2 MNPT	3-3/4 / 95	3	M130(1)	M133
4-1/4	3 MNPT	4-1/2 / 114	3	M664-24	M634-24

1. Steel Nipple



Female ACME Vapor Return Couplings

Vapor return couplings are available with 1-1/4 through 2-1/4 in. female ACME threads on one side and 3/8 through 1-1/4 in. male NPT threads on the other. Brass or steel construction. Standard product temperature rating is -20 to 160°F / -29 to 71°C.

Female ACME Vapor Return Couplings

FEMALE ACME, IN.	MALE NPT, IN.	LENGTH, IN. / mm		TYPE
				Brass
1-3/4	1	3-1/4 / 83	5	M151
2-1/4	1-1/4	3-3/8 / 86	7	M160

Type M390 POL Filler Coupling

6 in. / 152 mm male POL to 1/4 in. NPT male filler coupling. Brass construction. Replacement O-rings are available. Standard product temperature rating is -20 to 160°F / -29 to 71°C.

POL Filler Coupling

TYPE	MALE POL	MALE NPT, IN.	LENGTH, IN. / mm
Brass			
M390(1)	Soft Nose	1/4	6 / 152

1. Replacement O-ring T12945T0012.



TYPE M612

O-rings for Male Adaptors

The 2-1/4 and 3-1/4 in. male adaptors listed above can be supplied with replacement O-rings instead of the conventional washer type of gasket. O-rings give a tighter seal in most cases than the washers. Standard product temperature rating is -20 to 160°F / -29 to 71°C.

O-ring for 2-1/4 in. Adaptors T12655T0012

O-ring for 3-1/4 in. Adaptors 1H291706562

Adaptor Caps

TYPE		FEMALE ACME, IN.	MALE ACME, IN.
Brass	Steel		
M611	----	2-1/4	1-3/4
M612	M622	3-1/4	1-3/4
M613	M623	4-1/4	3-1/4



2



3



TYPE M570

Single-Piece POL Adaptors

These single-piece brass POL adaptors are available in four styles. Connections are 1/4 through 3/4 in. NPT, 3/8 in. flare and 1/2 in. NPT flare. Brass construction. Standard product temperature rating is -20 to 160°F / -29 to 71°C.

Single Piece POL Adaptors			
TYPE Brass	POL CONNECTION	OTHER CONNECTION, IN.	
M286	Female POL	1/2 MNPT	2
M287		3/4 MNPT	2
M357	Male POL	1/2 FNPT	3

Filler Hose Adaptor

Intended for the outlet of a bobtail truck filling hose, the Type M570 enables the filling hose to be removed if the filler valve fails to close. An integral back check in the adaptor prevents gas from escaping in the event of a failure of the filler valve. The filler valve should be repaired as soon as possible and the Type M570 removed from the filler valve. Standard product temperature rating is -20 to 160°F / -29 to 71°C.

Filler Hose Adaptor			
TYPE	FILLER VALVE CONNECTION, IN.	HOSE END VALVE CONNECTION, IN.	BODY MATERIAL
M570	1-3/4 Female ACME	1-3/4 Male ACME	Brass



TYPE M450A



TYPE M178

Filler Valve Adaptor

Type M450A – allows methanol to be added through conventional designed double back check filler valves with a 1-3/4 in. male ACME filler connection and 3/4 in. FNPT outlet. Standard product temperature rating is -20 to 160°F / -29 to 71°C.

Seals and Plugs

ACME plugs of various sizes and materials are used in female ACME threads to keep debris out of the piping systems.

Seals and Plugs		
DUST SEAL	PLUG	BODY SIZE, IN.
Type M178 plastic	----	1-1/4 Male ACME
Type M179 plastic	----	1-3/4 Male ACME
Type M180 plastic	----	2-1/4 Male ACME
Type M181 plastic	----	3-1/4 Male ACME
----	Type M535-34 steel	4-1/4 Male ACME



TYPE M108 OR M109



TYPE M219



TYPE M229



TYPE M431



TYPE M432

Female ACME Caps

ACME caps of various sizes and materials are used on male ACME threads to keep debris out of the piping systems. Small sizes are designed for hand tightening. Standard product temperature rating is -20 to 160°F / -29 to 71°C.

Larger sizes are intended to be either tightened by hand or with the use of the Type P120B spanner wrench.

Female ACME Caps

SIZE FEMALE ACME, IN.	TYPE		
	Plastic[1]	Brass	Steel
1-1/4	M108	----	----
1-3/4	M109	M229[2]	M219[2]
2-1/4	----	M431	M432
3-1/4	----	M441	M443
4-1/4	----	M605-34	M625-34

1. For LPG only.
2. Add - 1 suffix for Type P147 ring and chain.

Clamp Hose Couplings

Type M3162 – Clamp Hose Couplings, for use on LPG or Anhydrous Ammonia (NH_3), are designed to be compact yet rugged for long, dependable service. A small boss on the clamp portion of the coupling keeps the bolt from turning when installing, making installation much easier. Each ductile iron unit receives a coat of electro deposition paint. Larger size clamp hose couplings can be furnished with a swivel nut female ACME outlet that reduces weight and space. Standard product temperature rating is -20 to 160°F / -29 to 71°C.



TYPE M3162
(STANDARD OUTLET)

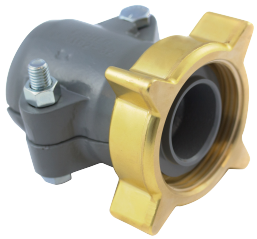

TYPE M3162-32B
(SWIVEL NUT OUTLET)

Clamp Hose Couplings

TYPE[2]	COUPLING STYLE	BODY SIZE, IN.	HOSE I.D., IN. / mm	APPROXIMATE HOSE O.D., IN. / mm
M3162-08	Clamp Type, Standard Outlet	1/2 MNPT	1/2 / 13	15/16 / 24
M3162-12		3/4 MNPT	3/4 / 19	1-1/4 / 32
M3162-16		1 MNPT	1 / 25	1-1/2 / 38
M3162-20		1-1/4 MNPT	1-1/4 / 32	2 / 51
M3162-24		1-1/2 MNPT	1-1/2 / 38	2-1/4 / 57
M3162-32		2 MNPT	2 / 51	2-3/4 / 70
M3162-48		3 MNPT	3 / 76	3-3/4 / 95
M3162-12S[3]	Clamp Type, Swivel Nut Outlet	1-3/4 Female ACME	3/4 / 19	1-1/4 / 32
M3162-32S[3]		3-1/4 Female ACME	2 / 51	2-3/4 / 70
M3162-32B[1]				
M3162-48B	Clamp Type, Swivel Nut Outlet	4-1/4 Female ACME	3 / 76	3-3/4 / 95
M3162-48S	Clamp Type, Swivel Nut Outlet	4-1/4 Female ACME	3 / 76	3-3/4 / 95

1. Has a brass swivel nut with steel or ductile iron nipple. Do not use with Anhydrous Ammonia (NH_3).
2. Maximum allowable working pressure 350 psig / 24.1 bar.
3. Has a steel swivel nut with ductile iron nipple.

Ring and Chain Assemblies

Ring and chain assemblies prevent loss of caps and seals. Available for 1-1/4 in. ACME caps or dust seals.



TYPE P147 OR P148



TYPE P167

Ring and Chain Assemblies

TYPE	FOR CAP OR DUST SEAL SIZE, IN.	FOR FISHER™ TYPE	
		Cap	Dust Seal
P147	1-1/4 ACME	M108	M178
P147[1]	1-3/4 ACME	M109 or M219	----
P148[2]		M109	M179
P148	2-1/4 ACME	----	M180
P167		M431 or M432	----
P183	3-1/4 ACME	----	M181
P167		M441 or M443	----
P167	4-1/4 ACME	M605-34, M625-34M and M535-34	----

1. Type P147 fits 3/4 in. pipe size.
2. Type P148 fits 1-1/4 in. pipe size.



TYPE P120B

Spanner Wrench

Used to tighten and loosen large female ACME caps and couplings in the 2-1/4, 3-1/4 and 4-1/4 in. sizes.

Spanner Wrench		
TYPE	OVERALL LENGTH, IN. / mm	CONSTRUCTION MATERIAL
P120B	18 / 457	Aluminum



TYPE P298

Types P206, P297 and P298 protective caps are used to keep moisture and foreign materials from entering the valves. These units are mounted outside the protective hood on the tank.

Relief Valve Protective Cap	
VALVE TYPE	PROTECTIVE CAP TYPE
H110	P206
H125	
H150	
H148	
H173	
H123	
H120	
H124	
H144	
H174	
H722	P297
H733	P298
H284	P299
H5114	
H5118	



TYPE P520L

Adjustable Orifice Reamer

The orifice reamer allows users to clean or ream out orifices of different sizes without changing tools. It allows for a range from 0.125 in. to size no. 52 (0.0635 in.).



TYPE N201

Cylinder Filling Valve

Type N201 – fills DOT cylinders by weight and stops the gas supply when specified fill weight is reached. Operated by air pressure, it is designed for beam type scales and requires no electrical or mechanical power.

The assembly comes completely piped up and includes special parts that allow the slide weight on the scale to move to zero. A red button appears in the indicator on top of the Type N201 each time a cylinder is filled to the desired weight. Standard product temperature rating is -20 to 160°F / -29 to 71°C.

FISHER

DOT Compliance on Jurisdictional Systems? Emerson is Here to Help.

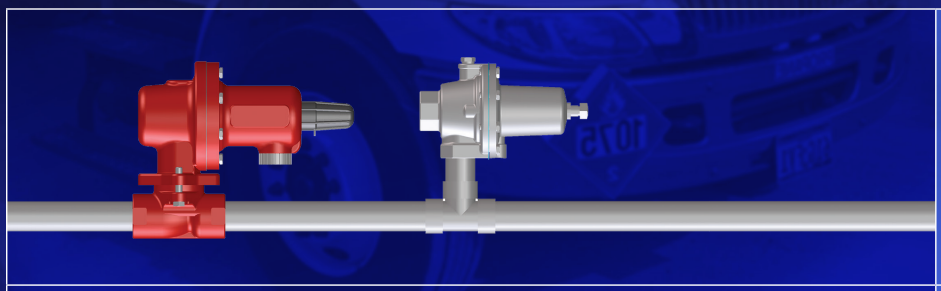

Relief Valve Over Pressure Protection

- Keeps the customer running with limited increase in the operating pressure
- Releases LPG to atmosphere after primary regulator failure

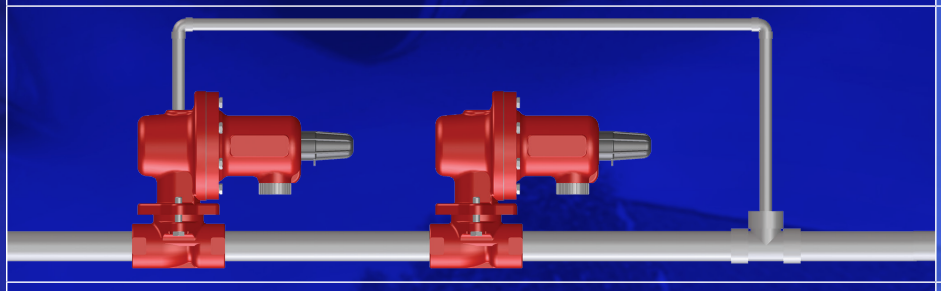

Monitor System Over Pressure Protection

- Highest station capacity than series regulation
- LPG is not vented to atmosphere
- Pressure is maintained close to normal set point after failure of the primary regulator

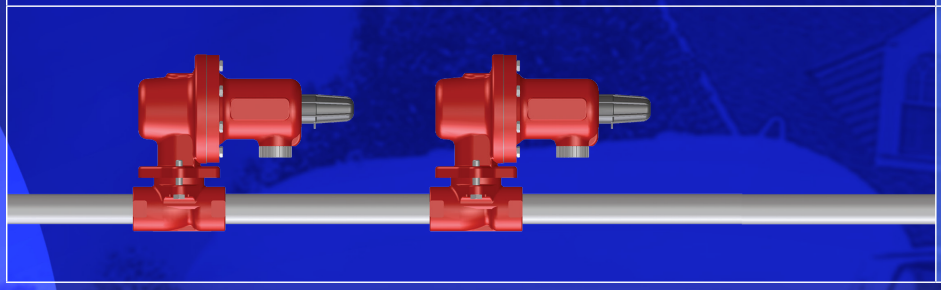

Series Regulation Over Pressure Protection

- Station capacity is reduced
- Pressure after primary regulator failure is significantly higher than normal operating pressure

NFPA58 Compliant? Emerson is Here to Help.

Liquid Outlet Lines

Prior Installation	Compliance Options	
Excess flow valve in tank with shutoff valve in piping	Replace excess flow valve with internal valve	Install Type N551 ESV as close as practical to shutoff valve
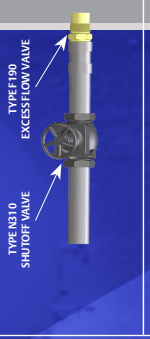		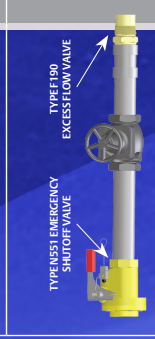

Liquid Inlet Lines

Prior Installation
Back Check valve in tank with shutoff valve in piping
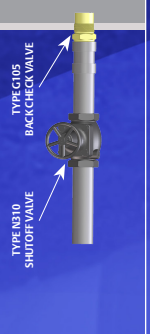

Liquid Inlet and Outlet Lines

Prior Installation	Compliance Options		
Excess flow valve in tank with shutoff valve in piping	Replace excess flow valve with internal valve	Install Type N551 ESV as close as practical to shutoff valve	Install G200 Series back check valve as close as practical to shutoff valve (inlet only)
		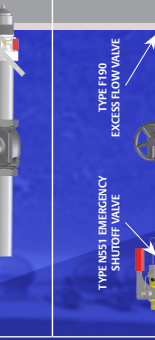	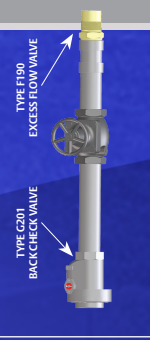

EMERSON

Conversion Factors

SI Conversion Factors

Multiply	By	To Obtain
Length and Area		
Millimeters	0.0394	Inches
Meters	3.2808	Feet
Sq. Centimeters	0.155	Sq. Inches
Sq. Meters	10.764	Sq. Feet
Volume and Mass		
Cubic Meters	35.315	Cubic Feet
Liters	0.0353	Cubic Feet
Gallons	0.1337	Cubic Feet
Cubic cm.	0.061	Cubic Inches
Liters	2.114	Pints (US)
Liters	0.2642	Gallons (US)
Kilograms	2.2046	Pounds
Tonnes (metric)	1.1024	Tons (US)
Pressure and Flow Rate		
Millibars	0.4018	Inches WC
Ounces/sq. in.	1.733	Inches WC
Inches w.c.	0.0361	Pounds/sq. in.
Bars	14.50	Pounds/sq. in.
Kilopascals	0.1450	Pounds/sq. in.
Kilograms/sq. cm.	14.222	Pounds/sq. in.
Pounds/sq. in.	0.068	Atmospheres
Liters/hr.	0.0353	Cubic Feet/hr.
Cubic Meters/hr	4.403	Gallons/min.
Miscellaneous		
Kilojoules	0.9478	BTU
Calories, kg	3.968	BTU
Watts	3.414	BTU per hour
BTU	0.00001	Therms
Megajoules	0.00948	Therms

ASME Conversion Factors

Multiply	By	To Obtain
Length and Area		
Inches	25.4	Millimeters
Feet	0.3048	Meters
Sq. Inches	6.4516	Sq. Centimeters
Sq. Feet	0.0929	Sq. Meters
Volume and Mass		
Cubic Feet	0.0283	Cubic Meters
Cubic Feet	28.316	Liters
Cubic Feet	7.481	Gallons
Cubic Inches	16.387	Cubic cm.
Pints (US)	0.473	Liters
Gallons (US)	3.785	Liters
Pounds	0.4535	Kilograms
Tons (US)	0.9071	Tonnes (metric)
Pressure and Flow Rate		
Inches w.c.	2.488	Millibars
Inches w.c.	0.577	Ounces/sq. in.
Pounds/sq. in.	27.71	Inches WC
Pounds/sq. in.	0.0689	Bars
Pounds/sq. in.	6.895	Kilopascals
Pounds/sq. in.	0.0703	Kilograms/sq. cm.
Atmospheres	14.696	Pounds/sq. in.
Cubic Feet/hr.	28.316	Liters/hr.
Gallons/min.	0.2271	Cubic Meters/hr.
Miscellaneous		
BTU	1.055	Kilojoules
BTU	0.252	Calories, kg
BTU per hour	0.293	Watts
Therms	100,000	BTU
Therms	105.5	Megajoules

Abbreviations

ASME	American Society of Mechanical Engineers
BTU per hour	British Thermal Units per Hour
CFH	Cubic Feet per Hour
CGA	Compressed Gas Association
CSST	Corrugated Stainless Steel Tubing
DBC	Diameter Bolt Circle
DOT	Department of Transportation
FNPT	Female National Pipe Thread
FPOL	Female POL Portion of CGA 510 Fitting (See POL)
GPH	Gallons per Hour
GPM	Gallons per Minute
MNPT	Male National Pipe Thread
MPOL	Male POL Portion of CGA 510 Fitting (See POL)
NFPA	National Fire Protection Association
NPT	National Pipe Thread
POL	Generic Term For A Compressed Gas Association Fitting #510
psi	Pounds per Square Inch
psid	Pounds per Square Inch, Differential Pressure
psig	Pounds per Square Inch Gauge
SAE	Society of Automotive Engineers
SCFH	Standard Cubic Feet per Hour
SCFM	Standard Cubic Feet per Minute
SCMH	Standard Cubic Meter per Hour
PTFE	Polytetrafluoroethylene
UL®	Underwriters Laboratories Inc.
UNC	Unified National Course (Defines a thread form/shape)
UNF LH	Unified National Fine - Left Hand (Defines a thread form/shape)
WC	Water Column
WOG	Water Oil and Gas

HSR Series Residential and/or Industrial/ Commercial Pressure Regulators

Service regulator with threaded NPT cast iron body, aluminum diaphragm casings and Nitrile (NBR) elastomers. Standard closing cap color is black for all spring ranges except the 1.25 to 2.2 psig range which has a red closing cap. When specified, closing cap wire is made of Stainless steel and utilize a plastic seal.

In order to obtain a Model Number, you must select the proper code in the proper order from the chart below. Through proper code selection, you will also obtain the correct list price per the construction chose.

All regulators are set with a flowrate of 50 SCFH air. Inlet pressure and setpoint conditions *are listed* in the table below. Consult factory if other setpoint conditions are required.



HSR SERIES RESIDENTIAL AND/OR INDUSTRIAL/COMMERCIAL PRESSURE REGULATORS

CODE	BODY SIZE, NPS (INLET X OUTLET)	BODY CONFIGURATION
P	3/4 x 3/4	Angle
R	3/4 x 1	
S	1 x 1	
B	3/4 x 3/4	Globe
D	3/4 x 1	
C	1 x 1	
F	1-1/4 x 1-1/4	

CODE	ORIFICE SIZE, IN.	INLET PRESSURE FOR SET FLOWS
B	1/8	60
C	3/16	50
D	1/4	30
F	3/8	15
H	1/2	10

CODE	SPRING RANGE	SETPOINT
F	4 to 6 in. w.c.	5 in. w.c.
B[1]	6 to 8 in. w.c.	7 in. w.c.
K	8 to 10 in. w.c.	9 in. w.c.
C	10 to 12.5 in. w.c.	11 in. w.c.
G	12.5 to 20 in. w.c.	14 in. w.c.
H[2]	20 to 35 in. w.c.	1 psig / 27.7 in. w.c.
J[2]	1.25 to 2.2 psig	2 psig

CODE	VENT SIZE, IN.	CLOSING CAP WIRE
A	3/4	No
B	1	No
C	3/4	Yes[3]
D	1	Yes[3]

1. CSA 6.18 Approval is available on this spring.
2. PFM-Industry Canada Approval is available on this spring.
3. Stainless steel wire with plastic cap.

- continued -

HSR Series Residential and/or Industrial/ Commercial Pressure Regulators

	CODE	BODY/VENT POSITION
	A	1C
	B	1D
	C	1E
	D	1F
	E	2C
	F	2D
	G	2E
	H	2F
	J	3C
	K	3D
	L	3E
	M	3F
	N	4C
	P	4D
	R	4E
	S	4F
	CODE	**INTERNAL RELIEF**
	Y	Y
	CODE	**APPROVALS**
	N	None
	Y	CSA 6.18
	P	PFM

1. CSA 6.18 Approval is available on this spring.
2. PFM-Industry Canada Approval is available on this spring.

Example: Customer requires a Type HSR with NPS 3/4 x 3/4 straight body, 3/16-inch orifice, spring range of 6 to 8 in. w.c., 1-inch vent size and body vent position of 3E, internal relief and it is not destined for Canada.

Solution:

	Body Size	Orifice	Spring Range	Vent Size	Body/Vent Position	Internal Relief	Approvals
FSHSR-	B	C	B	B	L	Y	N

64KB Regulator – for NH_3 Vapor Applications

High-Pressure Regulators									
TYPE	DESCRIPTION	CAPACITIES (NH_3)[1]			OUTLET PRESSURE SETTING		OUTLET ADJUSTMENT RANGE		INLET AND OUTLET CONNECTIONS, in.
		SCFH	SCMH	kg/hr	psig	bar	psig	bar	
64KB-33	Nh_3 Regulator	1718	48.7	51.14	10	0.69	3 to 15	0.21 to 1.0	1/2 FNPT
64KB-35		2357	66.7	70.13	20	1.4	5 to 35	0.34 to 2.4	
64KB-36		2717	76.9	80.84	40	2.8	30 to 60	2.1 to 4.1	
64KB-222		3437	97.3	102.27	50	3.4	35 to 100	2.4 to 6.9	
1. Based on inlet pressure 20 psig / 1.4 bar greater than outlet with 20% droop; Liquid capacity = 140 GPH / 530l/hr NH_3 liquid.									

Types 1301F and 1301G Regulators

1/4 NPT brass body and bottom cap. Brass spring case. 5/64-inch diameter stainless steel seat ring. Stainless steel diaphragm. Brass yoke and disk holder with Nylon (PA) disk. Neoprene (CR) body gasket and Fluorocarbon (FKM) bottom cap O-ring. Approximate shipping weight is 8 pounds.



TYPES 1301F AND 1301G

TYPE NUMBER	SPRING CASE	PRESSURE RANGE, psig	FS NUMBER
1301F	Drilled Hole	10 to 75	1301F-1
		50 to 150	1301F-2
		100 to 225	1301F-3
1301G	1/8 inch NPT	200 to 500	1301G-101

Type 627 Regulator

Nitrile (NBR) diaphragm. Disk material is Nitrile (NBR) with aluminum and ductile iron casings and Nylon (PA) with WCC steel casings. Maximum inlet pressure up to 1000 psig for Nitrile (NBR) disk and up to 2000 psig for Nylon (PA) disk. No internal relief. Body/Vent location 1D for threaded NPT connections and 3D for flanged bodies. Approximate shipping weight is 10 pounds.



627 SERIES REGULATOR

BODY SIZE	BODY MATERIAL	CASING MATERIAL	TRIM MATERIAL	PORT DIAMETER, IN.	SRPING RANGE			
					5 - 20 PSIG	15 - 40 PSIG	35 - 80 PSIG	70 - 150 PSIG
3/4 NPT	Ductile Iron	Aluminum	Aluminum	1/4	627-409	627-410	627-411	627-412
				3/8	627-413	627-414	627-415	627-416
				1/2	627-417	627-418	627-419	627-420
	WCC Steel	WCC Steel	Stainless steel	3/8	627-741	627-742	627-743	627-744
				1/2	627-745	627-746	627-747	627-748
1 NPT	Ductile Iron	Ductile Iron	Aluminum	3/8	627-116	627-117	627-118	627-119
				1/2	627-121	627-122	627-123	627-124
		Aluminum	Aluminum	3/8	627-492	627-493	627-494	627-495
				1/2	627-496	627-497	627-498	627-499
	WCC Steel	WCC Steel	Stainless steel	3/8	627-841	627-842	627-843	627-844
				1/2	627-845	627-846	627-847	627-848
2 NPT	Ductile Iron	Aluminum	Aluminum	3/8	627-572	627-573	627-574	627-575
				1/2	627-576	627-577	627-578	627-579
	WCC Steel	WCC Steel	Stainless steel	3/8	627-941	627-942	627-943	627-944
				1/2	627-945	627-946	627-947	627-948

OPTIONS:

Fluorocarbon (FKM) O-rings, diaphragm and disk. Add “V” to the model number. Example: 627-496V.

CL150, CL300 and CL600 RF flanged valve bodies. Contact factory for model number.

Long body for 1 and 2 NPT, Ductile Iron and Steel Body to match face-to-face dimensions for Type 630. Contact Factory for model number.

Type 627M Regulator

Nitrile (NBR) diaphragm. Disk material is Nitrile (NBR) with ductile iron casings and Nylon (PA) with WCC steel casings. Maximum inlet pressure is 1000 psig for Nitrile (NBR) disk and 2000 psig for Nylon (PA) disk. 1/4 NPT control line tap. Blocked throat with O-ring stem seal. No internal relief. Body/Vent location is 1D for threaded NPT connections and 3D for flanged bodies. Approximate shipping weight is 10 pounds.

BODY SIZE	BODY MATERIAL	CASING MATERIAL	TRIM MATERIAL	PORT DIAMETER, IN.	SRPING RANGE			
					5 - 20 PSIG	15 - 40 PSIG	35 - 80 PSIG	70 - 150 PSIG
3/4 NPT	Ductile Iron	Ductile Iron	Aluminum	1/2	627M-421	627M-422	627M-423	627M-424
	WCC Steel	WCC Steel	Stainless steel	1/2	627M-195	627M-196	627M-197	627M-198
1 NPT	Ductile Iron	Ductile Iron	Aluminum	1/2	627M-471	627M-472	627M-473	627M-474
	WCC Steel	WCC Steel	Stainless steel	1/2	627M-645	627M-646	627M-647	627M-648
2 NPT	Ductile Iron	Ductile Iron	Aluminum	1/2	627M-267	627M-268	627M-269	627M-270
	WCC Steel	WCC Steel	Stainless steel	1/2	627M-745	627M-746	627M-747	627M-748

Type 627R Regulator

Nitrile (NBR) diaphragm. Disk material is Nitrile (NBR) with aluminum and ductile iron casings. For WCC steel casings, disk material is Nitrile (NBR) for 3/16 through 1/2 inch port diameters. Maximum inlet pressure is 1000 psig for Nitrile (NBR) disk and 2000 psig for Nylon (PA) disk. Internal relief. Body/Vent location 1D for threaded NPT connections and 3D for flanged bodies. Approximate shipping weight is 10 pounds.

BODY SIZE	BODY MATERIAL	CASING MATERIAL	TRIM MATERIAL	PORT DIAMETER, IN.	SRPING RANGE			
					5 - 20 PSIG	15 - 40 PSIG	35 - 80 PSIG	70 - 150 PSIG
3/4 NPT	Ductile Iron	Aluminum	Aluminum	3/8	627R-113	627R-114	627R-115	627R-116
				1/2	627R-117	627R-118	627R-119	627R-120
	WCC Steel	WCC Steel	Stainless Steel	3/8	627R-817	627R-818	627R-819	627R-820
				1/2	627R-821	627R-822	627R-823	627R-824
1 NPT	Ductile Iron	Ductile Iron	Aluminum	1/2	627R-657	627R-658	627R-659	627R-660
		Aluminum	Aluminum	3/8	627R-193	627R-194	627R-195	627R-196
				1/2	627R-197	627R-198	627R-199	627R-200
	WCC Steel	WCC Steel	Stainless Steel	3/8	627R-913	627R-914	627R-915	627R-916
				1/2	627R-917	627R-918	627R-919	627R-920
2 NPT	Ductile Iron	Aluminum	Aluminum	3/8	627R-273	627R-274	627R-275	627R-276
				1/2	627R-277	627R-278	627R-279	627R-280
	WCC Steel	WCC Steel	Stainless Steel	3/8	627R-61	627R-62	627R-63	627R-64
				1/2	627R-65	627R-66	627R-67	627R-68

OPTIONS:

See Type 627 Regulator options.

Type 630 Cast Iron Regulator

Threaded NPT body with cast iron spring case, cast iron diaphragm adaptor and steel inlet adaptor. Brass seat ring and trim. Nylon (PA) disk. Stainless steel pitot tube (NPS 1 size only).

BODY SIZE	CONSTRUCTION	SPRING RANGE	PORT DIAMETER		
			1/4	3/8	1/2
1 NPT	Low Pressure	3 to 10 psig	630-49	630-53	630-311
		8 to 20 psig	630-50	630-54	630-312
		17 to 30 psig	630-51	630-55	630-313
		27 to 40 psig	630-52	630-56	630-314
	High Pressure	27 to 50 psig	630-9	630-13	630-315
		45 to 95 psig	630-10	630-14	630-316
		90 to 150 psig	630-11	630-15	630-317
		150 to 200 psig	630-12	630-16	630-318
		200 to 275 psig	630-815	630-818	630-319
		275 to 500 psig	630-823	630-824	630-320
2 NPT	Low Pressure	3 to 10 psig	630-69	630-73	630-321
		8 to 20 psig	630-70	630-74	630-322
		17 to 30 psig	630-71	630-75	630-323
		27 to 40 psig	630-72	630-76	630-324
	High Pressure	27 to 50 psig	630-29	630-33	630-325
		45 to 95 psig	630-30	630-34	630-326
		90 to 150 psig	630-31	630-35	630-327
		150 to 200 psig	630-32	630-36	630-328
		200 to 275 psig	630-816	630-819	630-329
		275 to 500 psig	630-828	630-829	630-330

Type 630 WCC Steel Regulator

Threaded NPT body with WCC Steel spring case and diaphragm adaptor. Steel inlet adaptor. Stainless steel trim includes seat ring, disk holder, valve carrier and diaphragm connector head in Stainless steel. Nylon (PA) disk. Stainless steel pitot tube (NPS 1 size only).

BODY SIZE	CONSTRUCTION	SPRING RANGE	PORT DIAMETER		
			1/4	3/8	1/2
1 NPT	Low Pressure	3 to 10 psig	630-8002	630-8003	630-8004
		8 to 20 psig	630-8006	630-8007	630-8008
		17 to 30 psig	630-8010	630-8011	630-8012
		27 to 40 psig	630-8014	630-8015	630-8016
	High Pressure	27 to 50 psig	630-8018	630-8019	630-8020
		45 to 95 psig	630-8022	630-8023	630-8024
		90 to 150 psig	630-8026	630-8027	630-8028
		150 to 200 psig	630-8030	630-8031	630-8032
		200 to 275 psig	630-8034	630-8035	630-8036
		275 to 500 psig	630-8038	630-8039	630-8040
2 NPT	Low Pressure	3 to 10 psig	630-8042	630-8043	630-8044
		8 to 20 psig	630-8046	630-8047	630-8048
		17 to 30 psig	630-8050	630-8051	630-8052
		27 to 40 psig	630-8054	630-8055	630-8056
	High Pressure	27 to 50 psig	630-8058	630-8059	630-8060
		45 to 95 psig	630-8062	630-8063	630-8064
		90 to 150 psig	630-8066	630-8067	630-8068
		150 to 200 psig	630-8070	630-8071	630-8072
		200 to 275 psig	630-8074	630-8075	630-8076
		275 to 500 psig	630-8078	630-8079	630-8080

Type 630R Cast Iron Relief Valve

Threaded NPT body with cast iron spring case, cast iron diaphragm adaptor and steel inlet adaptor. Brass trim. NBR O-ring. ½" port diameter

630R-13 2 in. FNPT Cast Iron; Relief Valve; 20 - 35 PSI

630R-18 2 in. FNPT Cast Iron; Relief Valve High Pressure; 150 - 250 PSI

133 Series Regulators

NPS 2 Cast iron body. Single seat construction with Neoprene (CR) disk. Includes aluminum cage and seat ring, Nylon (PA) guide bushing and Stainless steel stem and stem sleeve. Nitrile (NBR) O-ring seals and valve disk, Nitrile (NBR) and Nylon (PA) diaphragms and 2-way stabilizer vent. Approximate shipping weight is 35 pounds for the 2 NPT and 40 pounds for the NPS 2 flanged.



133 SERIES REGULATOR

Type 133L Low-Pressure Regulator

BODY CLASS AND END CONNECTION	FS NUMBER FOR SPRING RANGE					
	2 TO 4 IN. W.C.	3-1/2 TO 6 IN. W.C.	5 TO 9 IN. W.C.	8-1/2 TO 18 IN. W.C.	14 TO 28 IN. W.C.	3/4 TO 2 PSIG
NPT	133L-1	133L-2	133L-3	133L-4	133L-5	133L-6
CL125 FF	133L-7	133L-8	133L-9	133L-10	133L-11	133L-12

Type 133H High-Pressure Regulator

BODY CLASS AND END CONNECTION	FS NUMBER FOR SPRING RANGE		
	1-1/2 TO 3 PSIG	2 TO 5 PSIG	5 TO 10 PSIG
NPT	133H-1	133H-2	133H-3
CL125 FF	133H-4	133H-5	133H-6

Type 133HP

NPS 2 body. Single seat construction. Neoprene (CR) disk. Full capacity. Aluminum cage and seat ring. Nylon (PA) plug guide bushing. Stainless steel stem and sleeve. Nitrile (NBR) O-ring seals and valve disk. Nitrile (NBR) diaphragms. Cast iron spring case. Cast iron closing cap. Approximate shipping weight is 60 pounds. See Type LS200 as replacement for the Type 133HP.

BODY CLASS AND END CONNECTION	MATERIAL	FS NUMBER FOR SPRING RANGE						
		2 TO 5 PSIG	4.5 TO 10 PSIG	6 TO 20 PSIG	16 TO 30 PSIG	26 TO 40 PSIG	36 TO 50 PSIG	45 TO 60 PSIG
NPT CL125 FF	Cast Iron	133HP-AC6 133HP-AD6	133HP-AC7 133HP-AD7	133HP-AC1 133HP-AD1	133HP-AC2 133HP-AD2	133HP-AC3 133HP-AD3	133HP-AC4 133HP-AD4	133HP-AC5 133HP-AD5
NPT CL150 RF	Steel	133HP-BC6 133HP-BE6	133HP-BC7 133HP-BE7	133HP-BC1 133HP-BE1	133HP-BC2 133HP-BE2	133HP-BC3 133HP-BE3	133HP-BC4 133HP-BE4	133HP-BC5 133HP-BE5

299H Series Pilot-Operated Regulator

Pilot-operated regulator with integral pilot. Pilot spring range is 1 to 3.25 psig. Standard bleed restriction (red, 0.044-inch). Delrin® regulator main spring seat. Stainless steel tubing with steel plated fittings. No pilot filter included. Body vent position 4E. Approximate shipping weight is 19 pounds for 1-1/4 and 1-1/2 NPT; 21 pounds for 2 NPT and CL150 RF; 30 pounds for NPS 2, CL125 FF; and 35 pounds for NPS 2, CL250 RF.



TYPE 299H PRESSURE REDUCING REGULATOR

Registration Type

SENSING	CODE
External	M
Internal	N
Dual	P

Control Spring

SET PRESSURE RANGE	OPTION NUMBER
3.5 to 6 inches w.c. 5 to 9 inches w.c. 7 to 20 inches w.c. 16 to 40 inches w.c.	D1 D2 D3 D4
1 to 3.25 **(standard)** 2.75 to 6 psig 5 to 16 psig 14 to 35 psig 30 to 60 psig	- - - - D7 D8 D9 D10

299H Series Pilot-Operated Regulator (continued)

Body Size and End Connection

BODY SIZE, NPS	BODY MATERIAL	END CONNECTION	CODE
1-1/4	Gray Cast Iron	NPT	S
1-1/2		NPT	A
2		NPT	B
2		CL125 FF—10 inches face-to-face	C
2		CL125 FF—7.5 inches face-to-face	R
1-1/2	Steel	NPT	E
2		NPT	F
2		CL150 RF	M
1-1/2	Ductile Cast Iron	NPT	G
2		NPT	H
2		CL125 FF	J
2		CL250 RF	K
DN 50		EN PN 16	L

Orifice Size

ORIFICE SIZE, In.	CODE
1/4 x 3/8	F
3/8	G
1/2	H
3/4	J
7/8	M
1	K
1-3/16	L

Bleed Restriction

COLOR	SIZE, IN.	OPTION NUMBER
Green	0.071	E2
Red **(standard)**	0.044	- - - -
Blue	0.082	E3
None(1)	None	E4

1. This option removes the bleed restriction screw.

Type 99 LP Constructions

SERVICE	TYPE NUMBER	ORIFICE SIZE	OUTLET SPRING RANGE	MAXIMUM INLET PRESSURE	MINIMUM DIFFERENTIAL PRESSURE	MAIN DISC MATERIAL	REPAIR KIT PART NUMBER	ADDITIONAL PARTS	ADDITIONAL PART - PILOT DISC (FKM)
High Pressure or Low Pressure	99-510P	7/8 In.	1/4 - 2 psig	250 psig	3 psid	Nitrile (NBR)	R99LX000012	----------	1B8868X0022
	99-511P		1 - 5 psig						
	99-513P		2 - 10 psig						
	99-512P		5 - 15 psig						
	99-515P		10 - 20 psig						
	99-903P		10 - 65 psig				R99HX000012		
Low Pressure Only	99-501P	1 1/8 In.	1/4 - 2 psig	150 psig	3 psid	Nitrile (NBR)	R99LX000012	----------	
	99-502P		1 - 5 psig						
	99-503P		2 - 10 psig						
	99-504P		5 - 15 psig						
	99-505P		10 - 20 psig						
	99-901P		10 - 65 psig				R99HX000012		
High Pressure Only	99-501PH	1 1/8 In.	1/4 - 2 psig	300 psig	10 psid	Nylon (PA)	R99LX000012	1E480603152	
	99-502PH		1 - 5 psig						
	99-503PH		2 - 10 psig						
	99-504PH		5 - 15 psig						
	99-505PH		10 - 20 psig						
	99-901PH		10 - 65 psig				R99HX000012		

*Kits are the same for monitor constructions which have "M" at the end of part number, ex: 99-510P and 99-510PM use same repair parts.

*PN: 1E480603152 is Nylon (PA) disc (white color)

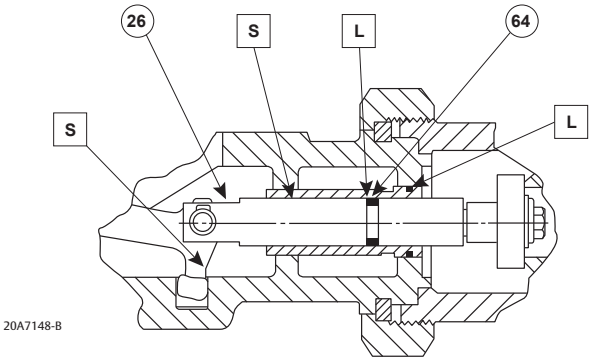

☐ APPLY SEALANT (S) / LUBRICANT (L)

O-RING STEM SEAL FOR MONITOR CONSTRUCTIONS "M"

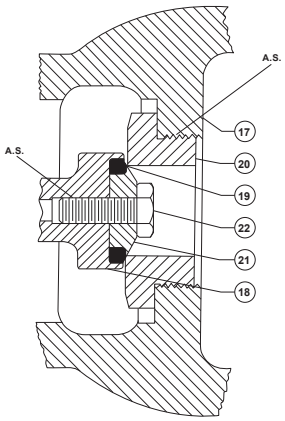

O-RING SEAT DETAIL FOR TYPE 99 REGULATOR WITH TYPE 61L (LOW PRESSURE) OR 61H (HIGH PRESSURE)

OPTIONS:

O-ring Main Seat Option adds "O" to the model number. See figure above for seal shape and orifice.

Monitor Configuration adds "M" to the model number. This option is for o-ring sealed throat and full external registration.

Pilots

Type No.	Description
6351V-2	Type 6351 Pilot for Type 1098/1098H; 5 to 35 psig / 0.34 to 2.4 bar; Viton®
6358EBHLP	250 to 375 psig / 17.2 to 25.9 bar; Relief Valve Pilot Assembly; with Elbow
6358EBLP-1	85 to 140 psig / 5.9 to 9.7 bar; Relief Valve Pilot Assembly; with Elbow
6358EBLP-2	130 to 200 psig / 9 to 13.8 bar; Relief Valve Pilot Assembly; with Elbow
6358EBLP-250	UL® Listed Pilot; 250 psig / 17.2 bar setpoint
6358EBLP-3	180 to 350 psig / 12.4 to 24.1 bar; Relief Valve Pilot Assembly; with Elbow
99H-1	99 Series Pilot (Type 61H); 10 to 65 psi / 0.69 to 4.5 bar
99HP-1	99 Series Pilot (Type 61HP); 35 to 100 psi / 2.4 to 6.9 bar
99L-1	99 Series Pilot (Type 61L); 1/4 to 2 psi / 17 mbar to 0.14 bar
99L-2	99 Series Pilot (Type 61L); 1 to 5 psi / 69 mbar to 0.34 bar
99L-3	99 Series Pilot (Type 61L); 2 to 10 psi / 0.14 to 0.69 bar
99L-4	99 Series Pilot (Type 61L); 5 to 15 psi / 0.34 to 1 bar
99L-5	99 Series Pilot (Type 61L); 10 to 20 psi / 0.69 to 1.4 bar
XAPT6352002	Type 6352 Pilot for Type 1098 Regulator; 14 in. to 2 psig / 35 mbar to 0.14 bar
XAPT6352010	Type 6352 Pilot for Type 1098 Regulator; 2 to 10 psig / 0.14 to 0.69 bar
XAPT6352040	Type 6353 Pilot for Type 1098 Regulator; 3 to 40 psig / 0.21 to 2.8 bar
XAPT6352075	Type 6353 Pilot for Type 1098 Regulator; 35 to 125 psig / 2.4 to 8.6 bar

Repair Kits - Regulators

Type No.	Description
R299X000012	Type 299 Spare Repair Kit
R61HHX00012	Type 61HH Neoprene (CR)/Diaphragm Nitrile (NBR)/Disc Repair Kit
R61HPX00022	Type 61HP Standard Repair Kit
R61HX000012	Type 61H Nitrile (NBR) Diaphragm/Disc Repair Kit
R61LDX00012	Type 61LD Nitrile (NBR) Diaphragm/Disc Repair Kit
R61LX000012	Type 61L Nitrile (NBR) Diaphragm/Disc Repair Kit
R627HX00S12	Types 627H and 627HM SST/Nylon (PA) Trim Repair Kit
R627RX00A12	Types 627MR and 627R Aluminum/Nitrile (NBR) Trim Repair Kit
R627RX00A22	Types 627MR and 627R Aluminum/Nylon (PA) Trim Repair Kit

Repair Kits - Regulators (continued)

Type No.	Description
R627RX00S12	Types 627MR and 627R SST/Nitrile (NBR) Trim Repair Kit
R627RX00S22	Types 627MR and 627R SST/Nylon (PA) Trim Repair Kit
R627X000A12	Types 627 and 627M Aluminum/Nitrile (NBR) Trim Repair Kit
R627X000A22	Types 627 and 627M Aluminum/Nylon (PA) Trim Repair Kit
R627X000S12	Types 627 and 627M SST/Nitrile (NBR) Trim Repair Kit
R627X000S22	Types 627 and 627M SST/Nylon (PA) Trim Repair Kit
R627X000V12	Types 627 Aluminum/Fluorocarbon (FKM) Trim Repair Kit
R630X000L12	Type 630 Low Pressure Brass Trim with Comp/Disc Repair Kit
R630X000L22	Type 630 Low Pressure Brass Trim with Nylon (PA)/Disc Repair Kit
R64RX000012	Type 64R Spring Range 3 to 150 Repair Kit
R64RX000H22	Type 64R Spring Range 130 to 200 Repair Kit
R64SRT00012	Type 64SR LPG Regulator Repair Kit
R64X0000012	Type 64 Spring Range 3 to 150 Repair Kit
R64X0000H22	Type 64 Spring Range 130 to 200 Repair Kit
R67CX000012	Type 67C Brass/Nitrile (NBR) Repair Kit
R99HPX00012	Type 99HP Comp Disc 7/8 in. Port Repair Kit
R99HPX00022	Type 99HP Comp Disc 1-1/8 in. Port Repair Kit
R99HX000012	Type 99H Comp Disc 7/8 in. Port Repair Kit
R99HX000022	Type 99H Comp Disc 1-1/8 in. Port Repair Kit
R99LX000012	Type 99L Comp Disc 7/8 in. Port Repair Kit
R99LX000022	Type 99L Comp Disc 1-1/8 in. Port Repair Kit
R99LX000032	Type 99 Vent Assembly Retrofit Repair Kit
RCS200X0012	Type CS200 Repair Kit
RCS400X0012	Types CS400, CS403 and CS404 Repair Kit
RCS403X0012	Type CS403 Repair Kit
RCS404X0012	Type CS404 Repair Kit
RCS800XBLK2	Type CS800 with Black Disc Repair Kit
RCS800XBLU2	Type CS800 with Blue Disc Repair Kit
RCS800XGRN2	Type CS800 with Green Disc Repair Kit
RS100X00012	Types S100 and S102 Spare Less Seat Repair Kit

Repair Kits - Regulators (continued)

Type No.	Description
RS200XRT012	Type S200 Stabilizing Retrofit Repair Kit
RS201HX0012	Types S201H and S202H Spare Less Seat Repair Kit
RS201KX0012	Type S201K Spare Less Seat Repair Kit
RS201X00012	Types S201 and S202 Spare Less Seat Repair Kit
RS301FX0012	Types S301D and S301F Spare Less Seat Repair Kit
RS301PX0012	Type S301P, High Pressure and Type S302P; High Pressure Spare Less Seat Repair Kit
RS301X00012	Type S301, High Pressure; Type S302; High Pressure Spare Less Seat Repair Kit
RS400X00012	S400 Series Orifice Tube; 1/8 in. Repair Kit
RS400X00022	S400 Series Orifice Tube; 3/16 in. Repair Kit
RS400X00032	S400 Series Orifice Tube; 1/4 in. Repair Kit

Repair Kits - Valves

Type No.	Description
1P110799152	C404-32 Upper Spiral Wound Gasket
ERAA03396A0	C404-32 Retrofit Cable Pulley Kit
ERSA03240A0	C404-32 Lower Spiral Wound Gasket (Replaces T1118299152 and GA26077X032)
MK63EGLP001	Type 63EGLP Mounting Kit; Tank to Valve; Studs and Nuts
MK63EGLP002	Type 63EGLP Mounting Kit; Valve to Reducer; Bolts and Nuts
N56X-REPAIR	Contact your Fisher™ Distributor
R63EGLPX012	Repair kit for Type 63EGLP Main body
RC40016T012	2 in. Types C421 and C427 Repair Kit
RC40024T012	3 in. Types C421 and C427 Repair Kit
RC40324T012	3 in. Types C403-24 Repair Kit
RC40424T012	3 in. Types C404-24 Repair Kit
RC404YGT012	Types C404-32 Seal Replacement Parts Kit; Y Grade NGL
RC40710T012	Repair Kit for 1-1/4 in. Type C407-10
RC40710T032	Repair Kit Type C407-10, New Spring, Cam, with Gland Assembly, Seals, Nitrile (NBR)
RC40710T042	Type C407-10 Repair Kit, Main and Gland Seals, Cam and Spring
RC47016T012	2 NPT Types C471 and C477 Repair Kit
RC47024T012	3 NPT Types C471 and C477 Repair Kit
RC48324T012	Type C483 Repair Kit
RC48424T012	Type C484 Repair Kit

Repair Kits - Valves (continued)

Type No.	Description
RCN551T0012	Type N551 Packing Repair Kit
RFC40432T12	Type C40432 Retro Fit Kit
RFC4716T012	2 in. NPT Type C471/C477 Jet Bleed Retro Fit Kit
RFC4724T012	3 in. NPT Type C471/C477 Jet Bleed Retro Fit Kit
RFC4824T012	3 in. Flange Type C483/C484 Jet Bleed Retro Fit Kit
RN30008T012	Type N300-8/N400-8 Nitrile (NBR) Trim Repair Kit
RN30012T012	Type N300-12/N400-12 Nitrile (NBR) Trim Repair Kit
RN30016T012	Type N300-16/N400-16 Nitrile (NBR) Trim Repair Kit
RN30024T012	Type N300/N400-24 Nitrile (NBR) Trim Repair Kit
RN350T00012	N350/N450 Series Nitrile (NBR) Trim Repair Kit
T12689T0012	N300/N400 Series Repair Kit; Bonnet, Packing and Stem Assembly
T13090T0012	Type N550 Packing Repair Kit
T11396000B2	Retrofitted Type C404-32 Packing Replacement Kit
T11396000C2	Type C404-32 Seals Replacement Parts Kit
T20377000B2	2 in. Types C421, C427, C471 and C477; Nitrile (NBR) Gland Assembly with Gland O-ring
T20430000B2	3 in. Types C421, C427, C471, C477, C483, C484 and C486 Nitrile (NBR) Gland Assembly with Gland O-ring



64 SERIES

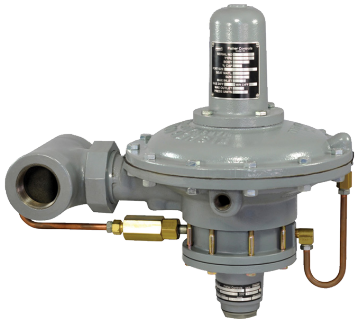

627 SERIES



99 SERIES

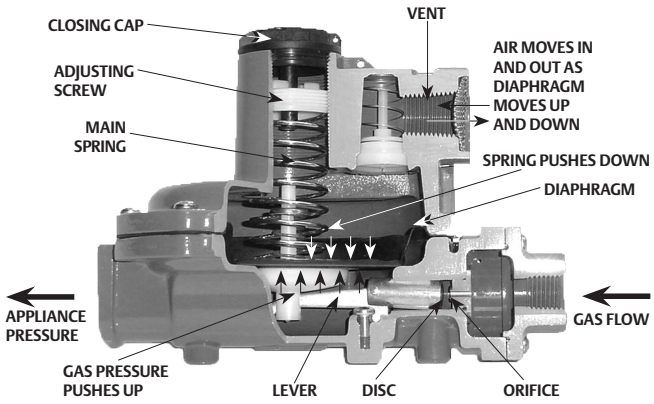

LP-GAS REGULATOR

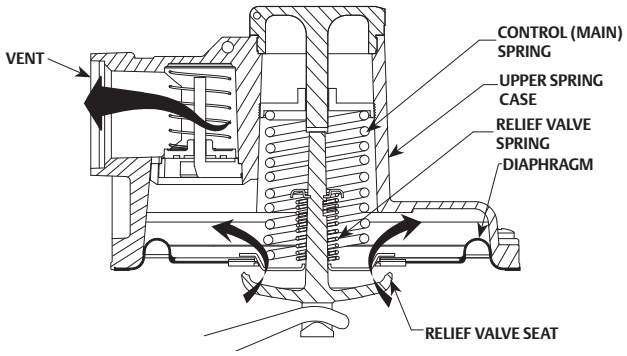

INTERNAL RELIEF VALVE BEING OPENED BY EXCESSIVE GAS PRESSURE

Introduction

The Education and Guidance includes articles covering regulator theory, sizing, selection, overpressure protection and other topics relating to regulators. This section begins with the basic theory of regulators and ends with conversion tables and other informative charts.

This section is for general reference only. For additional information please contact your local Sales Office.

LP-Gas regulators, after installation, get little attention or consideration as long as the regulator continues to do a good job. However, if troubles occur, the regulator operation impacts both the customer and the gas dealer and requires the full attention of the gas serviceman.

Proper installation and maintenance of the regulator during its time in service will pay big dividends in the form of increased customer satisfaction and fewer service calls.

Before examining some of the things you should be doing with regulator installation, let's look at the regulator. Understanding the regulator components and operation makes it easier to see how and where problems develop.

Parts and Principle of Operation of the Regulator

The basic regulator parts are:

- Valve disc and Lever
- Orifice
- Diaphragm
- Main spring
- Vent

As gas pressure enters the regulator inlet, it goes through the orifice, past the disc and pushes upward under the diaphragm, and against the main spring. Since the valve lever is connected to the diaphragm, upward movement of the diaphragm causes the valve disc to move closer to the orifice. As downstream gas demand increases, pressure under the diaphragm decreases allowing the main spring to push the diaphragm downward opening the orifice. This way, the regulator maintains the desired appliance pressure, usually 11 in. w.c. / 27 mbar.

The regulator vent performs two important functions. First, when the regulator valve disc has to move against the orifice to restrict the gas flow, the diaphragm moves upward and air is expelled through the vent. As gas load increases, the diaphragm moves downward and the disc moves away from the orifice. Air is pulled in through the vent. A regulator must "breathe" through the vent to properly regulate downstream pressure.

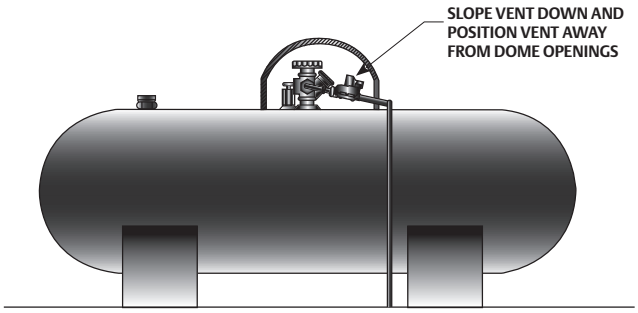

TANK INSTALLATION

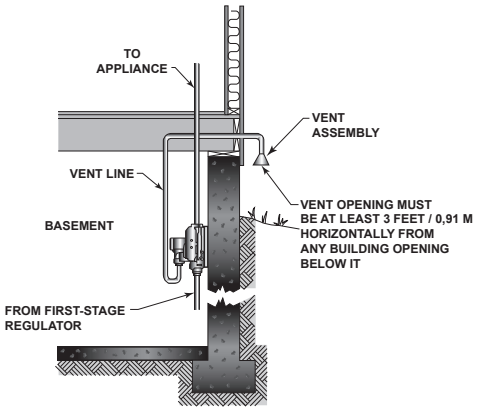

TYPICAL INDOOR INSTALLATION WITH VENT LINE AND VENT ASSEMBLY

Second, the regulator vent will exhaust LP-Gas when the internal relief valve opens. Every second stage domestic and light commercial LP-Gas regulator reducing pressure down to appliance pressure must have an internal relief valve[1]. Both the large main spring and the small relief valve spring inside the regulator act to hold the diaphragm down on the relief valve seat. When pressure under the diaphragm becomes too high, it overcomes both springs and allows the diaphragm to move away from the relief valve seat. Pressure then escapes through the regulator vent. An open internal relief valve can exhaust small bubbles of gas or large volumes of gas depending upon the condition that caused the overpressure situation.

Since the regulator must breathe to work properly, the vent cannot be blocked by snow, ice, mud, insects, etc. The vent must always be open. Make sure the screen is in place which keeps out insects such as wasps or mud daubers, which can build nests in the vent and plug the vent opening.

UL 144, Standard for LP-Gas Regulators requires that the second stage regulator internal relief valve must open (begin-to-bubble) between 170% and 300% of the regulator outlet setting. In other words, a regulator with an 11 in. w.c. / 27 mbar outlet setting must have its relief valve start-to-discharge when the pressure climbs into the 19 to 33 in. w.c. / 47 to 82 mbar range. The relief valve spring permits the relief valve to open before pressure gets above 33 in. w.c. / 82 mbar. UL 144 and NFPA 58, Liquefied Petroleum Gas Code also requires the internal relief valve to limit downstream pressure to 2 psi / 0.14 bar if the second stage regulator valve disc is removed. Tampering with the relief valve mechanism is not recommended.

Installation is Important

A lot of initial (call backs shortly after installation) and long term (maybe years after installation) problems can be minimized by paying attention to the initial installation and by properly installing the regulator per manufacturer's instructions and NFPA 58 requirements.

General Installation Instructions

All regulator installations should be made in accordance with NFPA 58 and any state or local regulations and the manufacturer's instructions. Compliance with these requirements will minimize future regulator trouble calls and could easily prevent a future accident.

Before Installing the Regulator

- Check for regulator damage, which might have occurred in shipment.
- Check for and remove any dirt or foreign material, which may have accumulated in the regulator body after removing the regulator from its shipping box.
- Blow out any debris, dirt, or copper sulphate in the copper tubing and the pipeline. This is especially important for first-stage regulators or integral two-stage regulators on tanks and cylinder applications.
- Apply pipe compound to the male threads of thepipe and install the regulator.
- Make sure gas flow through the regulator is in the same direction as the flow arrow on the body. "Inlet" and "Outlet" connections are clearly marked. Surprisingly, regulators do occasionally get installed backwards and leak immediately out the vent when pressurized.

Installation Location

- Protect the regulator from vehicular traffic and damage from other external sources.
- Install the regulator with the vent pointed vertically down. If the vent cannot be installed in a vertically down position, the regulator must be installed under a separate protective cover such as the tank dome. Installing the regulator with the vent down allows condensation to drain, minimizes the entry of water or other debris into the vent, and minimizes vent blockage from freezing precipitation.

1. Large commercial or industrial regulators supplying 0.5 psig / 0.03 bar systems may not have an internal relief, but are required by NFPA 58 to have an external relief valve or another overpressure protection device that will limit downstream pressure to 2 psi / 0.14 bar or less under specific test requirements.

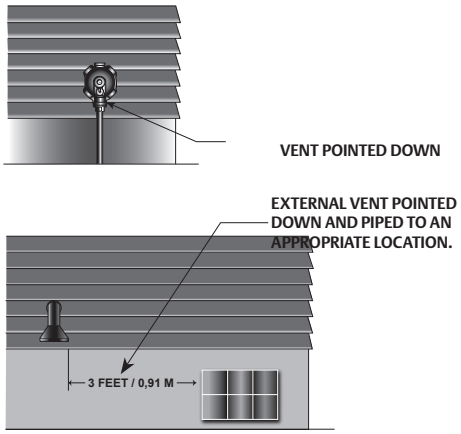

TYPICAL OUTDOOR INSTALLATIONS WITH REGULATOR VENT AND EXTERNAL VENT POINTING DOWNWARD

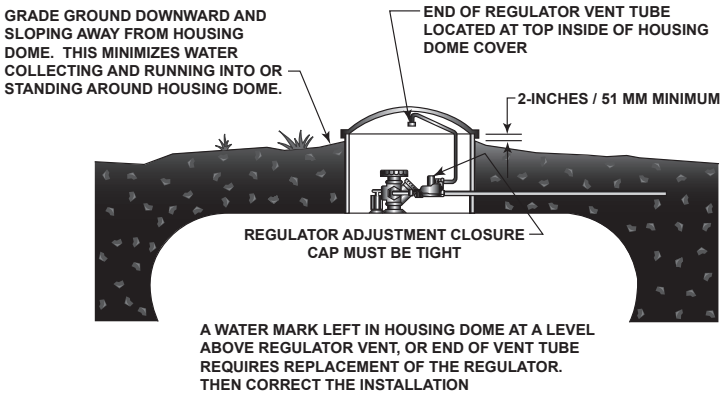

UNDERGROUND INSTALLATION

- Do not install the regulator in a location where there can be excessive water accumulation or ice formation, such as directly beneath a down spout, gutter, or roof line of building. Even a protective hood may not provide adequate protection in these instances.
- Install the regulator so that any gas discharge through the vent or vent assembly is over 3 ft / 0.91 m horizontally from any building opening below the level of discharge.
- Install the regulator so that any gas discharge through the vent or vent assembly is over 5 ft / 1.52 m in any direction from an ignition source.
- Install the regulator high enough above ground level - at least 18 in. / 457 mm - so that rain splatter cannot freeze in the vent.

Regulators Subjected to Heavy Snow Conditions

Regulators should always be installed above any possible snow or ice level. Installations in areas with heavy snowfall, drifting snow and snow/ice sliding off the roof may require additional regulator and vent protection so as not to block the vent or damage the regulator or piping attached to the regulator. Piping into and out of the regulator may need to be secured to the building so as to resist fracture from falling ice and snow. Additional installation options include, but are not limited to:

- Installing the regulator under a separate hood or enclosure,
- Installing the regulator in doors (such as a basement area) and venting to a protected location,
- Installing the regulator high under an eave and securing the piping.

The important part is to provide suitable protection to the regulator and piping so that the vent does not become blocked or the piping and regulator do not break from falling snow and ice.

Horizontally Installed Regulators

Horizontally mounted regulators such as first stage regulators or integral two-stage regulators installed in single cylinder installations and ASME tanks, must be installed beneath a protective cover or under the ASME tank dome. If possible, slope or turn the vent down sufficiently to allow any condensation to drain out of the spring case. Be careful that the slot in the tank dome or protective cover for the regulator's outlet piping does not expose the vent to the elements.

Indoor Installations

By code, regulators installed indoors have limited inlet pressure, and they require a vent line to the outside of the building as shown in Typical Indoor Installation with Vent Line and Vent Assembly. A vent assembly, such as Fisher™ Y602 Series, should be used at the end of the vent line. The same installation precautions apply to vent assemblies as the regulator vents covered previously.

Vent piping must not restrict the flow passage of the regulator's internal relief valve. Use the same size vent pipe or tubing as the vent size. If the vent is 3/4 in. pipe size, then use no less than 3/4 in. pipe or tubing ID for the vent line. To install the vent line, remove the vent screen and apply a good grade of pipe dope to the male threads of the line.

Sometimes the vent line will make the regulator unstable, and it will pulsate or chatter. Such problems are minimized by using a large vent line, keeping the vent line as short as possible and using as few elbows as possible. If instability still occurs, a stabilizer vent assembly (another Y602 Series external vent assembly) at the end of the line may help. Adding or removing vent line length a few inches may also solve the problem.

Underground Installations

Underground container systems require a vent tube to prevent water from entering the regulator spring case. Remove the vent screen and install a vent tube. The vent tube must be run from the regulator vent to above the maximum water table. The vent tube opening must terminate at the extreme top inside of the dome cover. Make sure the regulator's closing cap is on tightly, and maintain drainage away from the dome at all times.

If an integral regulator is used on an underground tank, 2 vent lines will be required.

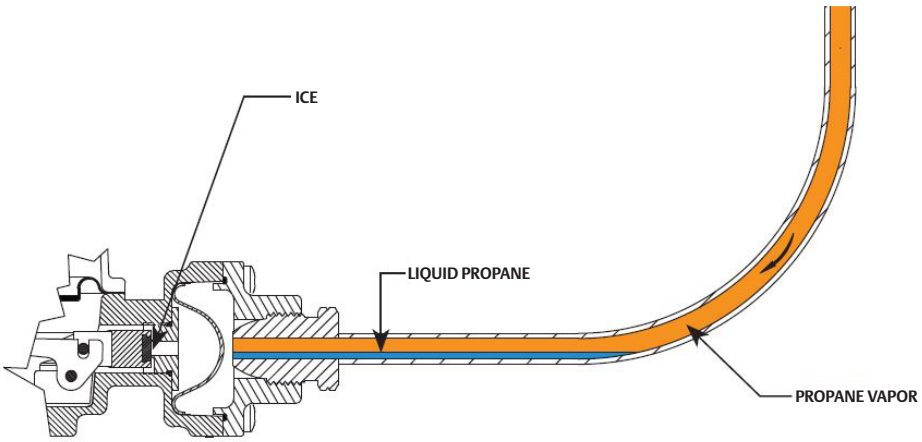

WATER IN LP-GAS CAN TURN TO ICE AT THE REGULATOR'S INLET AND BLOCK GAS FLOW

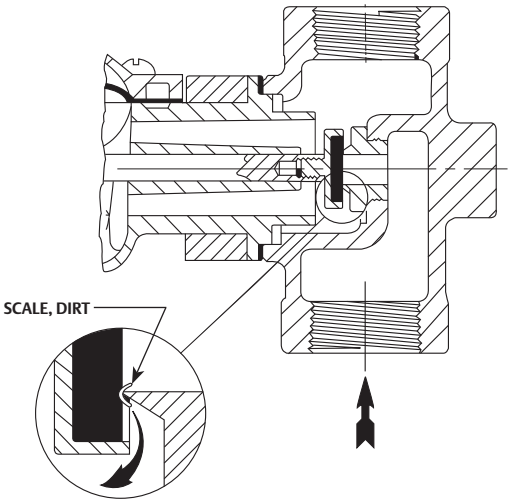

GAS LEAKAGE CAUSED BY CHIPS PREVENTING THE DISC FROM SEATING TIGHTLY ENOUGH AGAINST THE ORIFICE

After Installation

Once the regulator is properly installed, the vast majority of operating problems can be attributed to chips–pieces of dirt, pipe scale, and other foreign materials; blocked vents and on occasion, water in the gas.

What to Do About Chips (Debris)

The valve disc and the orifice are critical components for controlling pressure, and especially at lockup (no flow). The synthetic rubber valve disc must be smooth and flat; the orifice must be free of nicks and its "nose" properly formed. A little dirt or chip lodged between the disc and orifice can cause slight pressure deviations that may result in unacceptable regulator performance when the regulator goes to pilot load or lockup.

What makes the chip's work easier is the fact that the disc rarely moves more than a few thousandths of an inch away from the orifice, even on heavy loads. Trouble shows up when there isn't much demand for gas–perhaps just the pilot lights are in use. At that time the disc has to move right up against the orifice to throttle the very small flow. If chips hold the disc far enough away to allow just a bit more flow than is being consumed, the pressure in the house piping will build up above the desired appliance pressure.

Excessive appliance pressure means customer service calls for poor appliance operation or the internal relief valve in the regulator opens to discharge some of the excess pressure resulting in gas loss and gas odor complaints.

To minimize chips, always blow out all pipe or tubing fittings when making the installation. When changing ICC cylinders, blow or clean out the cylinder connection before attaching the pigtail to the cylinder service valve.

While chips are a rough adversary, it still takes a fairly stubborn piece of foreign material to pose serious problems. Many times the powerful force of the valve disc pushing against the orifice can break up the chips and return things to normal.

But no matter what, chips can't be kept away all of the time. The important thing is to recognize the problem. In most instances, simply blowing out the lines and the regulator inlet will clear up the situation.

Worn or Damaged Regulator Disc and Orifice

The orifice "nose" must be carefully formed and handled by the manufacturer. Even a tiny nick that can hardly be seen will cause leakage when the regulator should lock up tight. When a regulator is taken apart, the orifice should be protected as much as possible.

The orifice nose tends to indent the disc even during ordinary operation. After many years, the disc can become indented enough to prevent tight lockup. Nicked orifices and indented discs result in the same problems as foreign material between the disc and orifice; potential internal relief valve discharge out the regulator vent. The solution is also the same–replace the disc and/or orifice.

Water in the Gas

Under certain conditions ice can form at the orifice inlet and prevent gas from entering the regulator. LP-Gas expands as it is reduced to a lower pressure, and it needs heat to expand. The heat comes through the walls of the regulator, making the inlet much colder. If water is present in the gas, it drops out of the gas at the inlet and eventually turns to ice if the temperature stays low enough.

If you suspect water in the LP-Gas, use methyl alcohol

(one pint to 100 gal. of fuel). Make sure all tanks and cylinders are thoroughly dehydrated before they go into service. Two-stage systems–a first-stage and a second-stage regulator– are much less susceptible to freeze-ups than a single-stage regulator. This is because more heat can be transferred from the outside through two regulators than just one. The second-stage regulator orifice is larger than a single-stage orifice and therefore more resistant to plugging by ice in the regulator inlet. Finally, since the second-stage regulator does not have a large inlet to outlet pressure differential, the cooling effect on the regulator is less which also minimizes ice formation in the regulator inlet.

Regulator Repair

In the current economic environment, regulator repair can fall into the realm of diminishing returns. The cost to replace a regulator may be less than the cost for parts, labor, and equipment investment required to repair regulators. Thus it becomes a company decision on repair versus replacing the regulator.

If the regulator is 15 years old or older, just replace the regulator.

Repair

If repair is the policy, always follow the manufacturer's instructions for parts replacement and regulator repair. It's fairly easy to repair regulators. A competent person, some common tools (such as a screwdriver and a crescent wrench), the necessary repair parts, and a test rack are required to do the job.

Repair would consist of the following:

1. The valve disc and the diaphragm should always be replaced, especially on units that have been in service for several years.
2. Check the orifice carefully and replace the orifice if it is dented or scratched on the seating surface.
3. Replace any corroded or damaged parts.
4. On reassembly, do not stretch the diaphragm of the regulator like a drum head.
5. Leave the flange screws loose until the adjusting screw has compressed the main regulator spring about half way.
6. Tighten the flange screws and the required diaphragm slack will be assured.
7. Test the regulator for setpoint, lockup, and leakage before reusing the regulator.

A test rack is needed for testing the regulator; it is available from most regulator manufacturers although some companies make their own. Every repaired regulator must be closely checked, tested, and set before it goes back into service.

No Repair

If repair is not your company policy, there is one check that can be made to potentially save a regulator, especially a relatively new regulator that does not lockup or leaks through the vent. There is a good probability that the lock-up issue or vent leakage is caused by debris in the inlet and at the orifice.

1. Remove the regulator from the line,
2. Blow out the inlet with compressed air,
3. Re-install the regulator, and
4. Check lockup and/or vent leakage again.
5. Replace the regulator if it still does not pass the tests.

Summing Up

There's nothing that responds to a little care any better than the LP-Gas regulator. But if it is overlooked, all kinds of troubles can result. Remember these points:

1. Install the regulator with the vent pointing down on outdoor service; use a vent line sized for the vent on underground tanks, regulators installed indoors, and where distance requirements from openings or sources of ignition dictate.
2. Keep the vent open and check it periodically to see that it's not blocked. If the vent has a screen, make certain that it is in place. Protect the regulator and vent from snow buildup and ice/snow falling off a roof.
3. Keep in mind that dirt and chips can cause vent leakage and poor lock-up performance. Clean lines and clean gas connections help reduce chip problems. Replacing the valve disc and orifice will usually correct any troubles.
4. Check the vent periodically to make sure it is not plugged or can be plugged.
5. A regulator that has been covered by water during a flood or heavy rain must to be replaced.

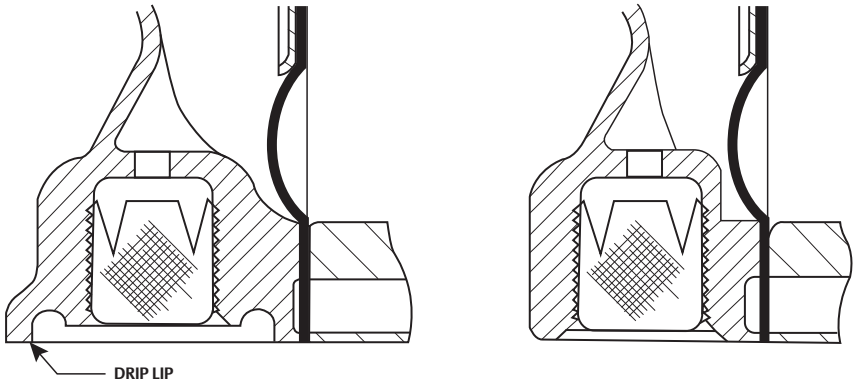

DRIP LIP VENT CONSTRUCTION HAS A RECESSED VENT OPENING WHILE THE NON-DRIP LIP VERSION ON THE RIGHT DOES NOT.

Freezing rain and sleet have long been potential sources of trouble for a LP-gas system. If the LP-gas regulator's vent becomes plugged by ice, high pressure gas can reach the appliances, creating a definite fire hazard.

The plugged vent scenario has been related numerous times, but it's still worth repeating. Once the regulator vent opening becomes obstructed by ice, snow, insects, or whatever, the regulator is no longer capable of breathing. A regulator's diaphragm moves up and down in response to differing gas loads. As it moves, air is taken in or expelled through the vent. Air can't move in and out of the spring case with a plugged vent, and the regulator is unable to keep doing its intended job.

One of two things happens within the regulator's spring case: (1) a vacuum develops, or (2) there's a pressure build-up. In the first instance the appliance pilot lights and any burners that are on may go out because the regulator's outlet pressure drops to 0 psig / 0 bar.

Stove burners don't usually have safety shut-offs, and if the vent becomes unplugged, gas will flow out of the open burner into the house. On the other hand, a pressure build-up in the spring case can allow the regulator outlet pressure to go excessively high, such as between 5 to 15 psig / 0.34 to 1.03 bar. In either case an obvious safety hazard exists.

Regulating Agencies Step In

These kinds of plugged vent situations have occurred due to vent freeze-overs often enough in the past to prompt regulating agencies to write new codes covering the installation of the LP-gas regulator and the design of the vent itself.

The 1974 edition of NFPA No. 58 "All regulators for outdoor installations, except regulators used for portable industrial applications, shall be designed, installed, or protected so their operation will not be affected by the elements. This protection may be integral with the regulator." (Actually NFPA No. 58 said much the same thing way back in the 1951 edition. This sentence appears in that edition: "Regulators shall be so installed that the elements will not affect their operation.")

Further, Underwriters' Laboratories "Standard for Pressure Regulators for LP-Gas"—U.L. 144—calls for regulators that have a drip lip vent design and states, "Such regulators shall be marked to specify that if for outdoor installation, the vent opening shall be down, or the regulator shall be installed under a protective cover..." So a regulator with a drip lip vent of the minimum size specified by U.L., installed with the vent pointed down, does not need additional protection. If, however, the vent does not have the drip lip or the regulator is installed so that the vent is not pointing down, there will have to be some sort of cover to protect the vent from the elements.

Just what is a drip lip vent? Figure 1 shows a typical example along with a vent not having the drip lip construction. It can be seen that the lip acts as a shield to the recessed vent opening, thus making it much more difficult for the opening to become plugged by freezing rain. The effectiveness of the drip lip design in resisting the vent opening from being covered by ice has been proven in freeze tests performed by Fisher™ Controls Co. as well as U.L.



ICE COMPLETELY COVERED THE REGULATOR FISHER™ CONTROLS USED IN THE FREEZE TESTS.

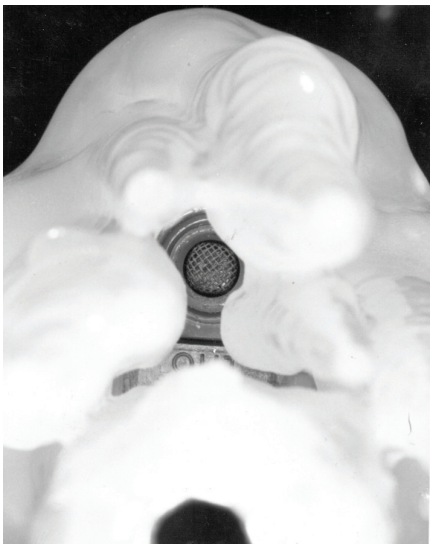

LOOKING UP INTO THE VENT OF THE SAME REGULATOR AS SHOWN IN FIGURE 2 REVEALS THAT THE OPENING REMAINS UNPLUGGED.



VENTS ON HORIZONTALLY MOUNTED REGULATORS BECAME QUICKLY PLUGGED DURING FISHER'S TESTS.

Testing Freeze Resistance

Tests conducted at the Fisher engineering laboratory in McKinney, Texas, demonstrated that a properly designed drip lip permits icicles to form in such a way as to actually protect the vent opening from becoming blocked. As the icicles grow around the circumference of the drip lip, an ice cylinder tends to develop. This ice cylinder works to keep the vent unobstructed no matter how much ice accumulates.

Fisher selected the Type 912 regulator—the one with the smallest drip lip diameter—to subject to a simulated freezing rain in an environmental chamber. The unit was installed with the vent opening pointing down, and ice was allowed to collect on the regulator until it reached a thickness of approximately 3/4 in. / 19.05 mm. Icicles grew to about 6 in. / 152 mm in length, forming a cylinder that kept the vent unplugged, as can be seen from the picture above looking up into the vent opening. The vent remained open until the bottom of the icicles reached a horizontal shelf or the floor of the environmental chamber.

Tests also showed that drip lip regulators installed in a horizontal position had their vents plugged by the simulated freezing rain in a matter of seconds. U.L. has been and currently is conducting its own freeze test program with regard to regulator vents. The laboratories require a manufacturer to label regulators which fail to pass the U.L. vent freeze-over test with the following: "CAUTION: For outdoor use, install under a protective cover."

Liability Considerations

The U.L. 144 ruling went into effect as far as regulators labeling is concerned on December 14, 1973. This requirement, along with the wording contained in NFPA No. 58, raises important questions as to an LP-gas dealer's legal liability.

Scarcely anyone in business is unaware of the tremendous increase in the number of law suits and the claims awarded by the courts to injured consumers. There has been a complete turnaround in the product liability law, and it affects everyone in the distribution chain—the manufacturer, the reseller, the installer, and the gas marketer. Each can be sued (together or separately) if there is an accident with a particular piece of equipment or system. It's up to these people to be able to show that they were not at fault and that they acted in accordance with the codes and rules of the applicable governing bodies.

Here's reason enough to begin a systematic program of inspection and upgrading of all regulator installations. Being on the losing end of just one law suit could cost many times the amount of time and money expended checking out the regulator. And certainly no one wants an accident to happen in the first place, regardless of the legal consequences.



AN AUXILIARY VENT ASSEMBLY CAN BE INSTALLED IN THREADED NON-DRIP LIP VENTS.



ANGLE STYLE AUXILIARY VENT ASSEMBLY USED ON A HORIZONTALLY MOUNTED REGULATOR.

Going About Upgrading

It would seem on the surface that LP-gas dealers would have to spend a lot of money for protective hoods or new regulators with the drip lip if they want their older installations to conform to the current U.L. and NFPA requirements. Although this indeed may be the case, there are a few options open to dealers which would give compliance without being too costly. Let's go over the most common domestic hook-ups.

ASME Tanks—Nearly all domestic tanks have hoods to begin with. Make sure that the first stage or single stage regulator is completely under the hood. Another thing to watch for is to be certain the slot in the hood for the regulator outlet piping does not extend high enough to expose the vent to the elements. Slope the regulator vent downward enough to allow any condensate that might collect to drain out through the vent. Don't defeat the entire purpose of the hood by leaving it open.

Regulators at the House—Second stage regulators at the building being served should be checked to see if the unit has a drip lip and that the vent is pointing vertically down. Most non-drip lip versions have a threaded vent opening in which an auxiliary vent assembly could be installed that gives all the advantages of an integral drip lip.

Twin Cylinder Hook-Ups—Many of these installations already have some kind of protective cover. On those that do not, the same auxiliary vent assembly can be used as described above if the regulator's vent is threaded. Smaller regulators most probably do not have a threaded vent, and many simply have a slotted vent opening. The decision to add a hood or install a new drip lip regulator ought to be made on the basis of the age of the old regulator. A regulator that has been in service for over ten years is a likely candidate for replacement.

Single Cylinder Installations—Here the regulator vent cannot be pointed down with conventional straight or angle POL adaptors because the regulator hits the top of the cylinder. So it would appear it makes a little difference whether the regulator has a drip lip or not because a hood is the only thing that satisfies the new rulings. There are, however, other possibilities for single cylinder hook-ups.

Regulators with threaded vents can use an angle auxiliary vent assembly like the one shown in the figure above. Other alternatives are encasements and vent protectors.

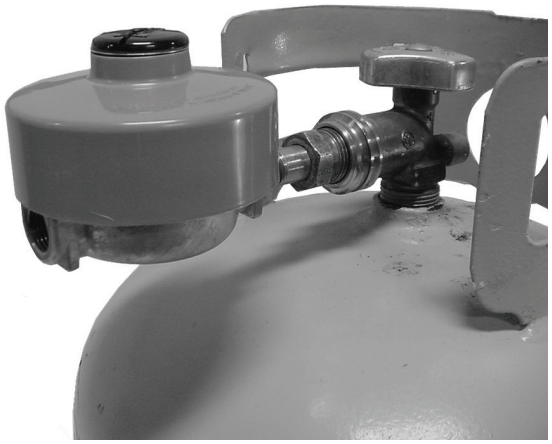

ENCASEMENTS OR VENT PROTECTORS MAY BE ABLE TO SOLVE THE HORIZONTAL MOUNTING PROBLEM.

Other Factors

While freezing rain or sleet are the most common causes of vent obstruction, they're not the only ones. Snow, insects, and mud can also plug the vent. It ought to be checked each time a gas delivery is made to see that it is free from any obstruction. In areas where snow can cover the entire regulator, a protective hood should be considered. Don't install a regulator directly under roof eaves, down spouts, or in other locations where there can be excessive water accumulation.

Mud and road splatter can pose special difficulties for regulators used on recreational vehicles. The 1974 edition of NFPA No. 501C (Standard for Recreational Vehicles) specifically states, "Regulators shall be installed so the regulator vent will not be affected by the elements such as by...mud or by wheel spray."

Sometimes the LP-gas container on the RV is installed in a spot where the regulator can catch the full brunt of any spray from the wheels. Conventional covers usually aren't effective against road splatter because the vent needs protection not only from the top and sides but from the bottom as well. LP-gas dealers can explain the problem to the RV owner when the container is being refilled and possibly remedy the situation.

All regulators should be inspected periodically for internal corrosion. Condensate or water can collect in the regulator's spring case, especially on horizontally mounted or insufficiently sloped units, and cause corrosion of the internal parts. If any corrosion or water marks are visible within the spring case, the regulator should be replaced. It is recommended that regulators in service over five years—or regulators moved from one location to another—be inspected for internal corrosion at regular intervals.

Checking and updating regulator installations is time well spent from both a liability and a customer acceptance stand-point. It's a policy that reduces the number of regulator malfunctions (and trouble calls) while at the same time helping to maintain customer satisfaction. And making sure all new regulators have the drip lip type construction will be a big aid in cutting installation costs on domestic hook-ups.

Table 1

TEMPERATURE OF THE LIQUID PROPANE	AMOUNT OF WATER IN A FULL 100 LBS / 45.4 KG CYLINDER	AMOUNT OF WATER IN A FULL 500 GALLON / 1893 L TANK
100°	3/4 ounce	16-1/2 ounces
32° (water freezes)	1/10 ounce	2 ounces

Table 2

TEMPERATURE OF THE PROPANE VAPOR OR LIQUID	HOW MANY MORE TIMES THE WEIGHT OF WATER CAN BE CARRIED BY VAPOR THAN BY LIQUID PROPANE
100°	4.2
40°	8.3

Table 3

TEMPERATURE OF PROPANE VAPOR	AMOUNT OF WATER IN 855 CU. FT. / 24.2 M^3 OF VAPOR (A 100 LBS / 45.4 KG CYLINDER OF LIQUID EXPANDED INTO GAS)	AMOUNT OF WATER IN 18,240 CU. FT. OF VAPOR (A 500 GAL. / 1893 L TANK OF LIQUID EXPANDED INTO GAS)
100°	3-1/3 ounces	70 ounces
40°	1 ounce	22-1/2 ounces

Although most people don't realize it, the LP-gas regulator has to do a difficult job. Many think all the regulator does is reduce a given high pressure to a given low pressure. They're right but this is just the beginning.

Your regulator must compensate immediately for any gradual or drastic changes you or the weather may make on the inlet pressure. It must also compensate immediately for gradual or drastic changes your customers make in the gas load.

Your regulator has to be able to shutoff flow completely when the load goes down. Your regulator must be gentle enough to pamper the pilot light on Mrs. Jones' stove and flexible enough to satisfy the appetite of a boiler—a turn-down that can be as high as 1000 to one.

To accomplish all this, your regulator is a finely balanced mechanism in which only those features that contribute to proper operation have been retained. One of the quickest ways to confound the regulator mechanism is the presence of water in LP-gas. And there is only one "non-freezing" regulator, the one that gets a water free diet of LP-gas.

The freezing regulator problem is eliminated by using only dry fuel and keeping the fuel water free until it passes through the regulator. Unfortunately, these desirable conditions cannot always be brought about. It is, therefore, important to know the conditions that cause freeze ups and what can be done to prevent them.

Since all the trouble begins from the presence of water in the fuel, where does the water come from? From a variety of sources: Fuel can be water saturated when received from the natural gasoline plant or refinery unless care is taken in dehydration; dry fuel may become saturated with water when transported in tank cars that previously carried wet product; hydrostatic testing may leave water in cylinders and tanks which the dry propane can pick up; empty cylinders standing in moist atmosphere with the valve open allow air to enter the cylinder where the moisture condenses and is trapped.

How much water does it take to cause freeze up problems? Table 1 gives some idea of the amount of water which liquid propane can "absorb." It doesn't seem like very much, but it doesn't take much to cause problems.

Note that the warmer the liquid the more water it can hold in solution. Almost eight times as much at the summertime temperature of 100° as at freezing temperature! If your LP-gas comes to you in a tank car, it could be hiding three pints of water. Only a chemist could detect it. Let that propane cool to freezing temperature, however, and all but a part of the water is then free. Free to freeze up regulators.

But the water propane can carry as a liquid is hardly a drop in the bucket compared to what it can carry as a vapor. Look at Table 2.

It looks like the ability of propane vapor to carry water increases as things get colder. This isn't true. Table 2 means that the liquid loses its ability to hold water as things get colder faster than the vapor does. Table 3 shows how much water the vapor can hold. That goes down too, with lower temperatures.

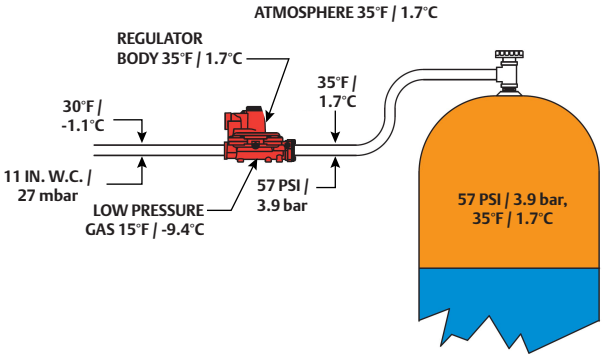

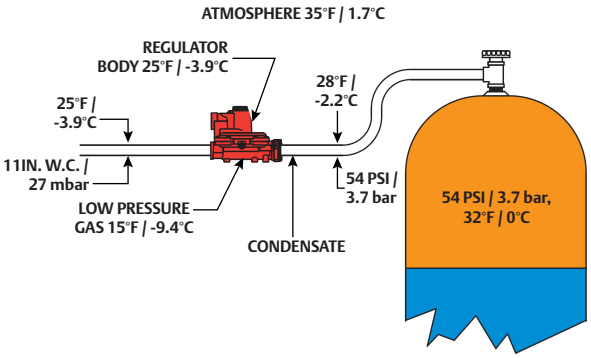

Let's look at actual operating conditions. Take a cylinder of gas, during the fall, with an outside temperature of 60 degrees. A cold spell drops the temperature to freezing, and water starts to collect in the bottom of the cylinder because neither propane liquid or vapor can "carry" the increased amount of water. It stays cold with the free water at the bottom of the cylinder. As vapor continues to be drawn off, the vapor robs the liquid propane of its water, since vapor can carry much more water than the liquid.

Mrs. Jones' stove and water heater are connected to this cylinder (through a regulator, of course). She starts cooking and Mr. Jones decides to take a bath. It's cold—about 35°—and propane vapor at that temperature comes out of the cylinder to the regulator inlet at a pressure of about 57 psi / 3.9 bar. The regulator goes to work maintaining proper appliance pressure, which shows a conventional single stage regulator installed at the customer's home.

Note that the gas on the low pressure side of the regulator is only 15°. What has happened? It takes heat to expand the gas from its compressed volume at 57 psi / 3.9 bar to its enlarged volume at 11 in. w.c. / 27 mbar for the appliances. This heat comes from the surrounding air through the walls of the regulator. After the gas has left the regulator and entered the outlet tubing, it goes back up to 30°. The only trouble is that the heat is where we don't need it—at the regulator outlet instead of the inlet.

The figures above show what can happen if the situation goes on for some time. There have been slight changes in pressure and temperature within the cylinder. This always happens when vapor is drawn off, and 54 psi / 3.7 bar is plenty of pressure to do the job. But look what has taken place at the regulator inlet. The expanding gas has pulled the temperature down to 28 degrees and propane condenses at the inlet. Free water appears because we cool the vapor and reduce its ability to carry water. In Figure 2 the condensate forms just ahead of the regulator orifice.

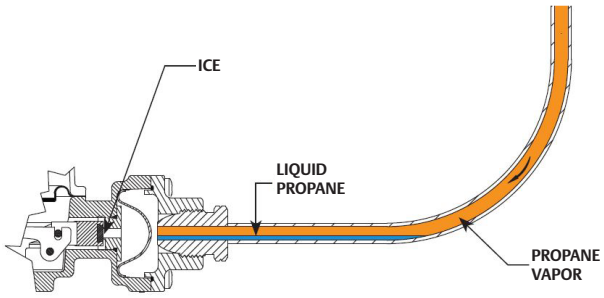

The figure above shows the condensate turned to ice at the orifice. This causes a freeze up unless the action of the regulator can break the ice jam.

There are a number of things you can do to prevent this kind of situation. Number one on the list would be to make sure you're using dry LP-gas. Secondly, make certain that all tanks and cylinders are thoroughly dehydrated before they go into service.

Here are a few other hints and precautions:

1. Use methyl alcohol if you suspect water (one pint to 100 gallons / 379 liter fuel).
2. Keep cylinder valves closed while cylinders are in storage.
3. Consider two stages of regulation, i.e., a first stage regulator and a second stage regulator. See Fisher's Handbook of Technical Data for more information.
4. Consider using a regulator with a larger orifice.
5. Install the regulator and pigtail so that condensate drains back to the cylinder.

The above practices should virtually eliminate freeze up complaints and the costly trouble calls that go with them.





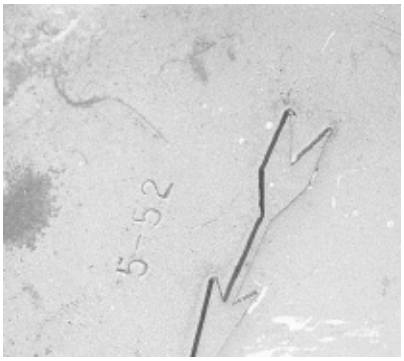

DATE STAMPING EXAMPLES

Introduction

LP-Gas regulators are very durable pieces of equipment that are able to automatically supply gas, year in and year out, and thus it's easy to take the regulator for granted. Oftentimes, the regulator receives minimal, if any, attention from the owner, marketer or the bobtail driver, who probably sees the regulator installation the most. A program to replace, inspect, and maintain regulators can prevent accidents. This bulletin lists some simple, common sense replacement considerations and installation/inspection procedures that can lessen the likelihood of an LP-Gas system being the cause of accident that could result in personal injury or property damage.

When to Replace A Regulator

Regulator service life depends upon the regulator's use and environment, and some environments are much more unfavorable than other environments. Some of the many variables in addition to daily operation that can diminish a regulator's service life include:

- Climatic conditions
- Flooding
- Air pollution
- Contaminants in the LP-Gas
- Installation location such as underground tanks or coastal areas
- Proper installation in all locations
- If the regulator has been periodically inspected, tested, and maintained.

Emerson Process Management Regulator Technologies Inc. recommends that most regulators, be replaced at 15 years from the date of manufacture. For the R600 Series, Types R122H, R222, and R232 regulators, we recommend that they are not be kept in service over 20 years from the date of manufacture. Regulators installed in underground tank domes or in coastal areas may need to be replaced sooner than the recommended period. In our experience, the majority of regulators that suddenly no longer control pressure occur in units that are over 15 years old. Replacing old regulators is probably the biggest single step that can be taken in helping to reduce accidents associated with LP-Gas regulators.

A 15-year-old regulator may have more years of life left in it, but exactly how many more years it will continue to work without causing problems is difficult to establish. To prevent an accident, replace the regulator before it wears out. Establishing a preventative inspection and maintenance program for regulators and propane systems will help find potential problems in operation, changes to the environment around the installation that may need to be addressed, or other areas that may impact the propane system operation. Refer to the section at the end of this article titled "Questions to Ask About the Regulator Installation."

Fisher™ stamps the regulator's date of manufacture usually in one of four places:

- The closing cap
- Between the flange screws on the spring case
- The bottom of the regulator body
- On a nameplate when provided

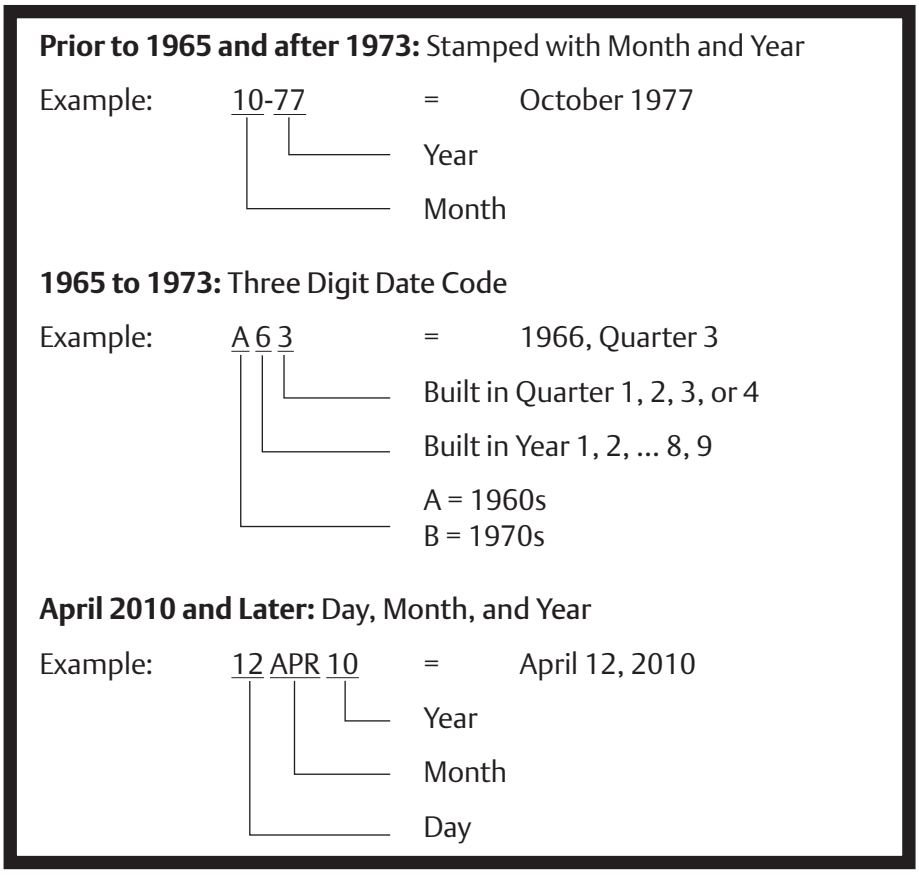

DATE CODING EXAMPLE

Starting April 1, 2010, Fisher™ regulator date stamping is in the form of a day, month, and year designation.

12APR10 indicating April 12, 2010.

Previously, Fisher stamped the date of manufacture by month and year such as 10-77 for October 1977.

And for a period from 1965 through approximately 1973, a date code was used such as A63.

First Character	A = 1960's B = 1970's
Second Character	6 in the example = year, so A6 is 1966. B2 would be 1972
Third Character	Quarter in which product was made 1 = 1st Quarter of year 2 = 2nd Quarter of year 3 = 3rd Quarter of year 4 = 4th Quarter of year

So A63 means the regulator was made in the 3rd Quarter, 1966. See Day Coding Example above.

Proper Regulator Installation

Proper regulator installation is vital for a regulator to function correctly for long periods of time. Therefore, the following information assumes that the regulator is on a vapor system and has been installed per NFPA 58, state or local regulations, and the manufacturer's instructions.

Wrong Regulator or No Regulator in the System

There are numerous types of LP-Gas systems—Single-Stage, Two-Stage including Integral regulators, 2 psig / 0.14 bar systems, and large commercial/industrial installations. Not having a pressure regulator (it has happened) in the system or a pressure regulator that is not suitable for the installation, high-pressure regulator instead of low-pressure regulator for example, can be disastrous.

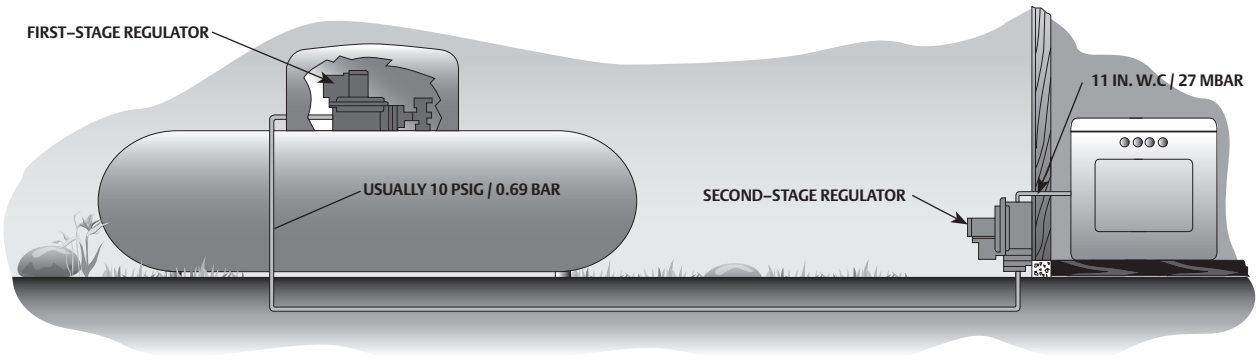

TWO-STAGE REGULATION, ONE AT TANK AND ONE AT BUILDING, REDUCING PRESSURE DOWN TO BURNER PRESSURE (11 IN. W.C. / 27 MBAR)

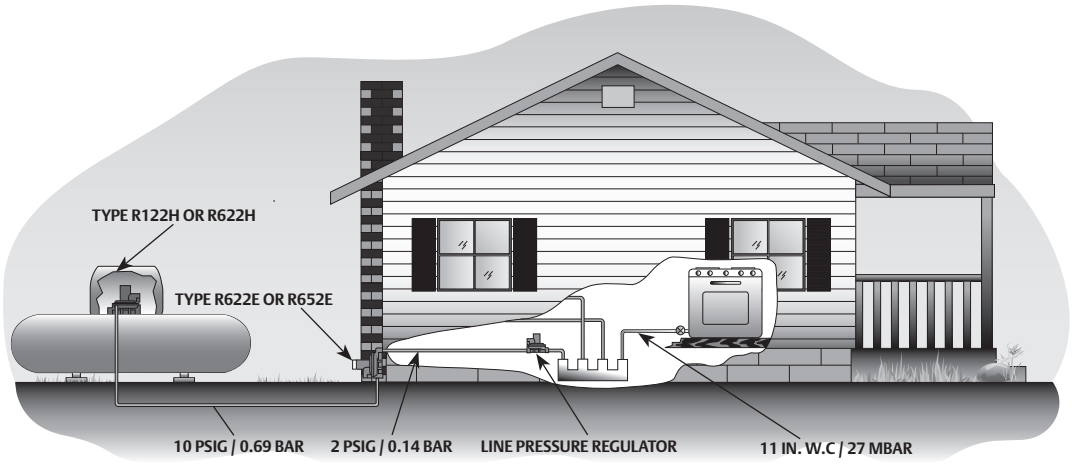

TYPICAL 2-PSI INSTALLATION

Proper Regulator Installation

Proper regulator installation is vital for a regulator to function correctly for long periods of time. Therefore, the following information assumes that the regulator is on a vapor system and has been installed per NFPA 58, state or local regulations, and the manufacturer's instructions.

Wrong Regulator or No Regulator in the System

There are numerous types of LP-Gas systems—Single-Stage, Two-Stage including Integral regulators, 2 psig / 0.14 bar systems, and large commercial/industrial installations. Not having a pressure regulator (it has happened) in the system or a pressure regulator that is not suitable for the installation, high-pressure regulator instead of low-pressure regulator for example, can be disastrous.

A Two-Stage System includes a first-stage regulator at the container and a second-stage regulator at the building or appliance. A first-stage regulator can feed more than 1 second-stage regulator. If the container is small so that it can be placed closer to the building, an integral two-stage regulator may be installed only at the container. The integral two-stage regulator combines a first-stage and second-stage regulator in one unit.

A 2-psig System is similar to a Two-Stage System, except that there are actually 3 regulators in the system. A first-stage regulator, typically set at 10 psi / 0.69 bar, is located at the tank; a second regulator, set at 2 psi / 0.14 bar, is typically located at the house; and finally a line pressure regulator set at 11 in. w.c. / 27 mbar is installed inside the building or at each appliance. The line pressure regulator, per ANSI Z21.80 / CSA6.22 Line Pressure Regulators standard, reduces 2 psig / 0.14 bar pressure to appliance pressure. It is rare to see an integral regulator in a 2 psig / 0.14 bar system, but integral 2 psi regulators that combine the first-stage and 2 psi (second regulator in the system) into a single unit can be used and are installed at the tank.

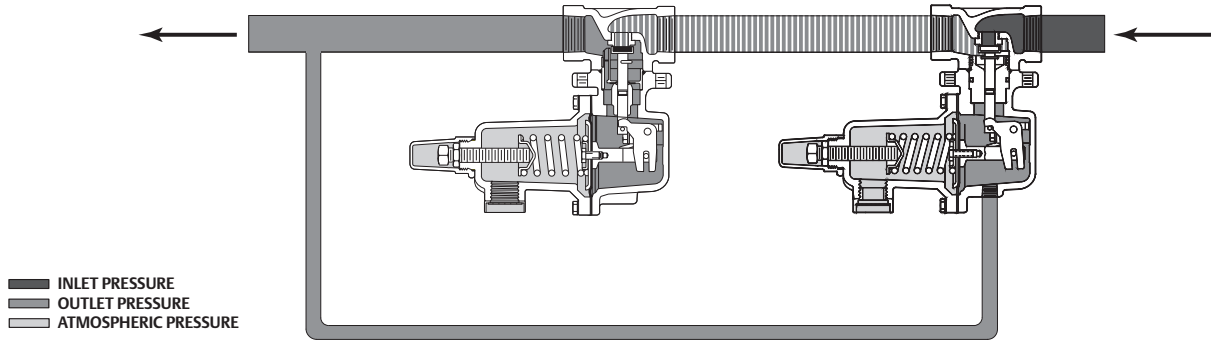

TYPE 627 DIRECT-OPERATED MONITOR OPERATIONAL SCHEMATIC

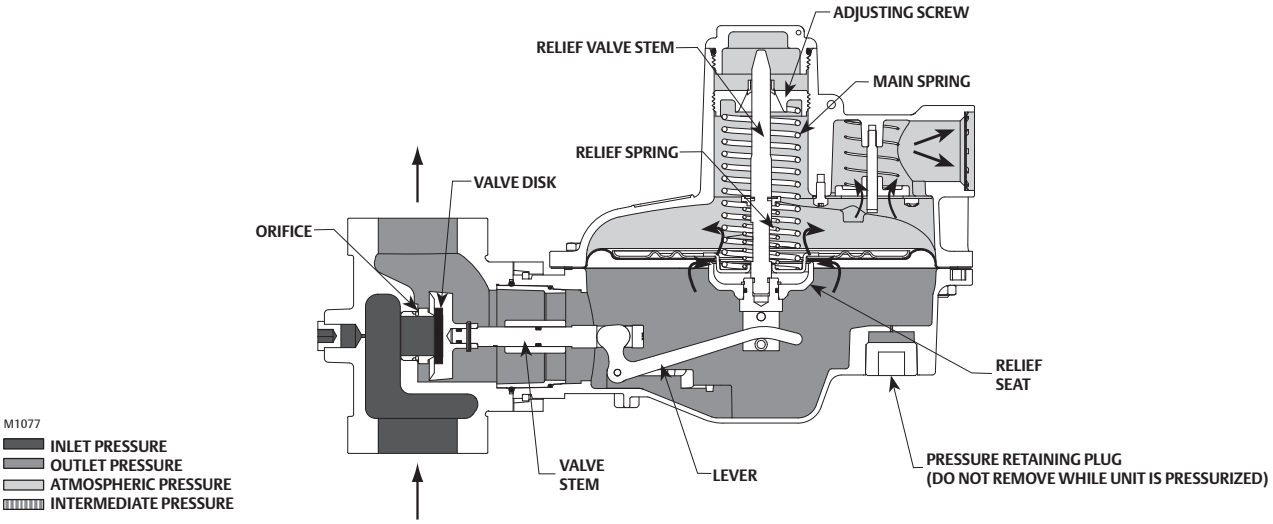

TYPE CS400IR INTERNALLY REGISTERED REGULATOR WITH INTERNAL RELIEF OPERATIONAL SCHEMATIC

Regulators standard, reduces 2 psig / 0,14 bar pressure to appliance pressure. It is rare to see an integral regulator in a 2 psig / 0.14 bar system, but integral 2 psi regulators that combine the first-stage and 2 psi (second regulator in the system) into a single unit can be used and are installed at the tank.

While **Single-Stage Systems** cannot be installed on new 0.50 psig / 0.03 bar fixed pipe gas pressure systems, they do still exist on older installations and therefore need to be inspected. NFPA 58 does not allow a new single stage regulator to be installed after June 30, 1997. Since it has been almost 15 years since a new single stage system could be installed, most existing single stage systems are probably over 15 years of age, and therefore need to be upgraded to a new two-stage regulator system that complies with the current NFPA 58 regulations. A single-stage regulator is installed at the container. Oftentimes the single-stage regulator can be replaced with an integral two-stage regulator resulting in minimal piping changes. If the container is far from the house, both a first and second-stage regulator will have to be installed.

Commercial and Industrial Systems also have to comply with NFPA 58 requirements for two-stage systems if they supply low-pressure gas to appliances. In some instances a high-pressure regulator that supplies more than 10 psi / 0.69 bar may be installed between the container and the first-stage regulator if needed to meet flow or piping demands. In some instances, additional external overpressure protection will be required between the high-pressure regulator and the first-stage regulator. Regulators used as second-stage regulators in these systems may not have internal relief protection or if they do, the relief valve may have limited capacity so that it may not meet the 2 psig / 0.14 bar relief pressure requirement. Therefore, additional external relief devices or other means of overpressure protection may be required depending upon the regulator construction used as a second-stage regulator. Monitor systems are being used more as another means of overpressure protection. A monitor system provides a “back up” regulator in the event the working regulator no longer controls pressure. Monitor systems do not vent gas to the atmosphere like an internal or external relief valve will do when the relief valve activates. Therefore, monitor systems need to be inspected annually to validate their continued proper operation. Commercial and industrial regulators, monitor regulators, and the external relief devices have to be installed properly and the information discussed in this article would apply equally to these systems along with the recommendations found in the product’s instruction manuals.

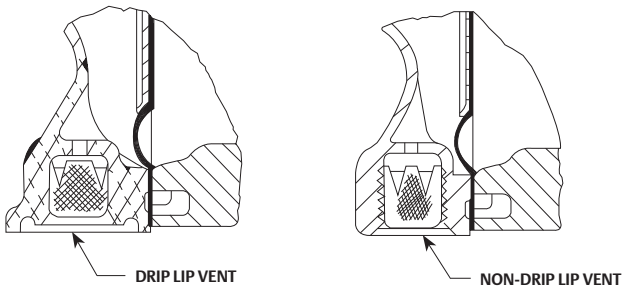

1/4 NPT REGULATOR VENTS WITH AND WITHOUT DRIP LIP DESIGN

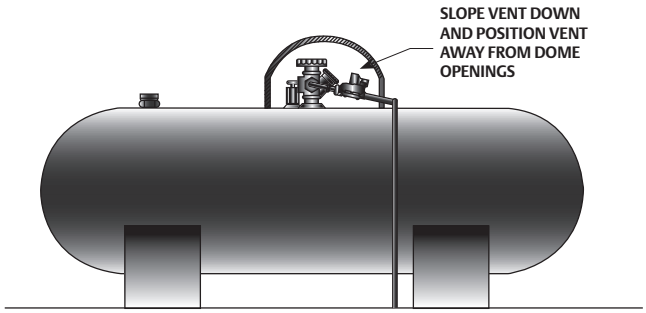

TANK INSTALLATION

Vent Orientation and/or Protection from Vent Blockage

Regulators must have an open vent in order to control pressure properly and have adequate flow area for the internal relief valve. Ice, mud, insects, dense snow, and paint covering the screened vent are few things that can cause a blocked vent. A blocked vent can cause overpressure at the appliances, resulting in the possibility of a serious accident. Since 1974 Underwriters Laboratories (UL) 144 "Standard for LP-Gas Regulators" has called for a regulator's vent to be a drip lip vent design. If the vent is not a drip lip design, the regulator manufacturer must label the unit with **"CAUTION: For outdoor use, install under a protective cover."**

Regulators, even with the drip lip vent, installed in a horizontal position must be under a protective cover or the container dome. Position the vent far enough away from any opening in the cover so that water cannot get into the regulator through the vent or freezing rain, sleet and snow can freeze across the vent screen.

If the regulator vent is oriented so that water can collect inside a regulator's spring case, that water can freeze in the winter. When the water freezes across the diaphragm surface, the diaphragm can no longer move up or down with changes in load demands. Likewise, the ice will prevent the internal relief from opening. When a load change decreases, the pressure in the downstream piping will increase because the disc cannot close and the relief valve will not open.

The effect of condensation on internal parts can be greatly reduced by installing the regulator so that the vent is pointing down or sloping downward when the regulator is installed under the container dome or under a protective cover. This minimizes corrosion on the pusher post and relief valve parts by keeping them out of the water as well as allowing the water to drain out the vent if heavy condensation occurs.

Make sure all regulators installed outdoors have the drip lip construction. Drip lip vents are extremely resistant to blockage by freezing rain (the most common cause for vent blockage) when properly installed outdoors with the vent pointing vertically down. 1/4 NPT regulator vents with drip lip design are much more resistant to freeze-ups than old style vents when installed pointing down. If the drip lip vent is not pointing vertically down, the "drip lip feature" will not keep the vent from freezing over with ice. The regulator vent or vent assembly on the end of a vent discharge line (from a regulator installed inside a building) should always be

- Pointed vertically down or
- Installed under a protective cover.

Regulators without a drip lip vent should have either an auxiliary vent assembly (Drip Lip Protection Added Through an Auxilliary Vent) installed in the vent or have a protective hood installed over the regulator.

Regulators should never be installed with the

- Vent pointing up (water can collect inside the regulator and freeze or cause corrosion problems).
- Vent pointing horizontal unless the regulator is covered with a protective cover or vent shelter. Without a protective cover, water could get inside the regulator and freeze or cause corrosion of internal parts. See Improper Installation: Horizontal Regulator Installation without Vent Cover.

Drip lip vents and/or protective covers do not eliminate the need for periodic inspection of the vent. Insects like mud daubers are apt to build nests in small openings, and they have caused vent blockage in the past. Mud has also caused problems on recreational vehicles when the regulator is exposed to road splatter. For more information on Drip Lip Vents, see Fisher™ **Bulletin LP-18, Tests Show How Drip Lips Can Prevent Regulator Freeze-Ups.**

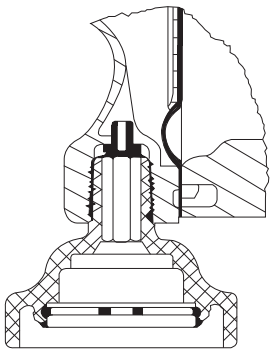

DRIP LIP PROTECTION ADDED THROUGH AN AUXILIARY VENT

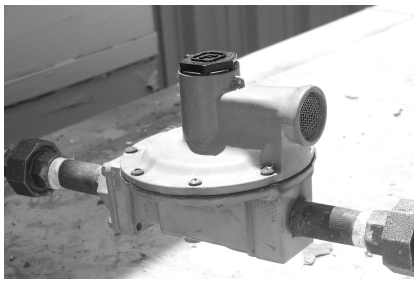

IMPROPER INSTALLATION: HORIZONTAL REGULATOR INSTALLATION WITHOUT VENT COVER

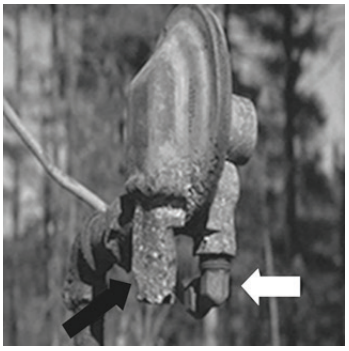

CORROSION DUE TO BELOW GROUND LEVEL INSTALLATION

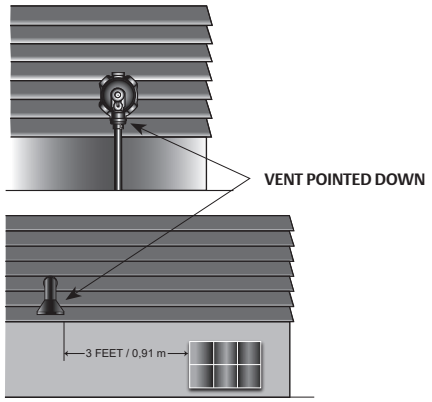

VENT INSTALLATION AWAY FROM WINDOWS, BASEMENT AIR INTAKES AND OTHER OPENINGS

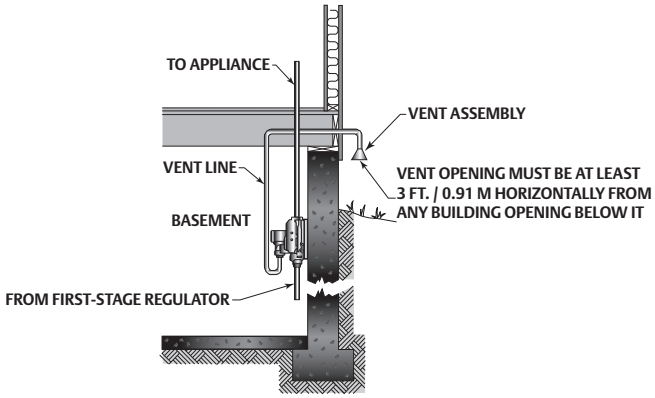

BASEMENT OR INDOOR INSTALLATION

Regulator Installed Above Ground Level

Regulators installed outdoors should be located at least 18 in. / 457 mm above the ground. This minimizes the amount of "splash back" that can bounce back up onto the screened vent area and either block the vent with ice (in the winter) or enter the regulator and create corrosion problems. This distance also keeps the regulator out of the dirt which can also cause corrosion issues.

Regulators should not be buried in the ground. Refer to Corrosion Due to Below Gound Level Installation image. This regulator was partially buried in the ground. The external corrosion (pitting) extended up onto the back of the lower casing. Inlet pipe boss (Black Arrow) broke away from the actuator. The 3/4 in. NPT vent (White Arrow) was piped away but with a 3/8 in. / 9.5 mm copper tube which restricts the flow through the vent from the internal relief valve.

Regulators should not be installed under a house eave or valley that allows water runoff and snow melt or ice and snow from a roof to fall directly onto the regulator. If the regulator has to be installed in such locations, then additional protection is required such as installing a vent line with an auxiliary vent piped to a better location, hoods, covers or shelters should be installed over the regulator. See the two sections in this article titled Installed away from windows, basements, air intakes, and other openings and regulators installed inside buildings for additional information on installing vent lines and auxiliary vents. Refer to Vent Installation Away from Windows, Basement Air Intakes and other Openings image.

Installed Away From Windows, Basements, Air Intakes, and Other Openings

NFPA 58 requires that the regulator(s) be installed so that the relief valve discharge from the regulator vent is

- At least 3 ft. / 0.91 m horizontally away from any building opening below the level of the relief valve vent discharge
- Not beneath any building unless well ventilated and not enclosed for more than 50% of its perimeter
- Not less tan 5 ft. / 1.5 m in any direction from ignition sources openings in to direct vent appliances or mechanical ventilation air intakes

If the regulator cannot be moved to comply with these requirements, then a vent line will have to be installed and the end of the vent line terminated at a place where it will comply with the requirements. The end of the vent line must also comply with the vent orientation and protection requirements discussed earlier.

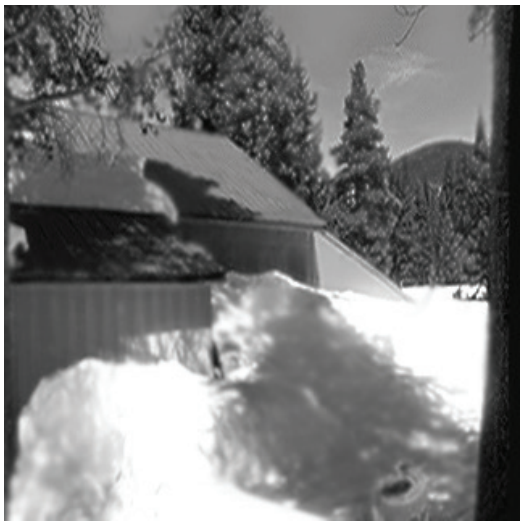

IS YOUR SECOND-STAGE REGULATOR UNDER A SNOW BANK?

Regulators Installed Inside Buildings

Regulators are sometimes installed inside a building because of long piping runs to one or more gas appliances. See Vent Installation Away from Windows, Basement Air Intakes and other Openings and Basement or Indoor Installation. Regulators inside buildings have some special conditions that have to be met in order to comply with NFPA 58 requirements. Some of those requirements include:

- No liquid LP-Gas piped into buildings except under certain conditions.
- No vapor pressure in excess of 20 psi / 1.4 bar except under certain conditions. Note also that second-stage regulators are limited to 10 psi / 0.69 bar maximum inlet pressure. So if 20 psi / 1.4 bar is piped into the building, an additional first-stage pressure regulator will have to be installed to maintain 10 psi / 0.69 bar to the second-stage regulators.
- The regulator vent must be piped to the atmosphere outside the building.
- The end of the vent discharge line must comply with the distance requirements from building openings and the vent orientation and protection requirements discussed earlier.
- The vent discharge piping must be the same nominal pipe size as the vent connection piping so as not to restrict the relief capacity and performance of the regulator. Long vent discharge lines may actually require increased pipe sizes to account for piping line loss.
- Vent discharge piping must be:
  - Metal pipe or tubing as allowed by the code or
  - PVC material per UL 651, Schedule 40 or 80 Rigid PVC Conduit
- If more than one regulator is installed indoors, separate vent lines must be run from each regulator, or special piping manifolds have to be designed so that discharge from one regulator relief valve will not backpressure the other regulator spring case through the vent connected to the same manifold.

Regulators Installed in Heavy Snow Areas

Providing a snow shelter over the regulator is a good practice. A snow shelter provides protection for a regulator:

- that is subjected to large and frequent snow falls,
- from accumulation of snow, or drifting snow,
- installed under a roof eave where snow and/or ice may slide off the roof and onto the regulator covering the regulator with snow,
- or even physically fracturing the regulator, inlet or outlet piping and shut-off valve below the regulator.

The snow shelter provides protection from heavy, wet snow that can damage the regulator or piping if it falls onto the regulator. A snow shelter could include any of the following:

- A protective cover manufactured or built to go over the regulator. The protective cover can either be home made or commercially available.
- Installing the regulator high above the snow accumulation or drift; it may be up under the eave (support and protect the inlet and outlet piping).
- Installed indoors and the vent piped to the outside (protect the external vent).

The snow shelter provides protection for the regulator vent so that snow does not drift under and up onto the vent screen. A shelter can provide a larger area, free of snow and ice, in which the regulator is installed. This larger open area allows space for the regulator to breathe or vent gas if the relief valve discharges.

There are many types of snow conditions. Some snow conditions are more porous and allow the regulator to breath under the snow. But a dense heavy snow can actually block the regulator vent. Thawing and refreezing also produces ice both over the snow surface and potentially around the regulator so that the regulator may actually become incased in ice, again blocking the regulator vent.

Mark the regulator location with a long stick and flag so that the regulator can be located quickly if needed. See figure Is Your Second-Stage Regulator Under a Snow Bank?

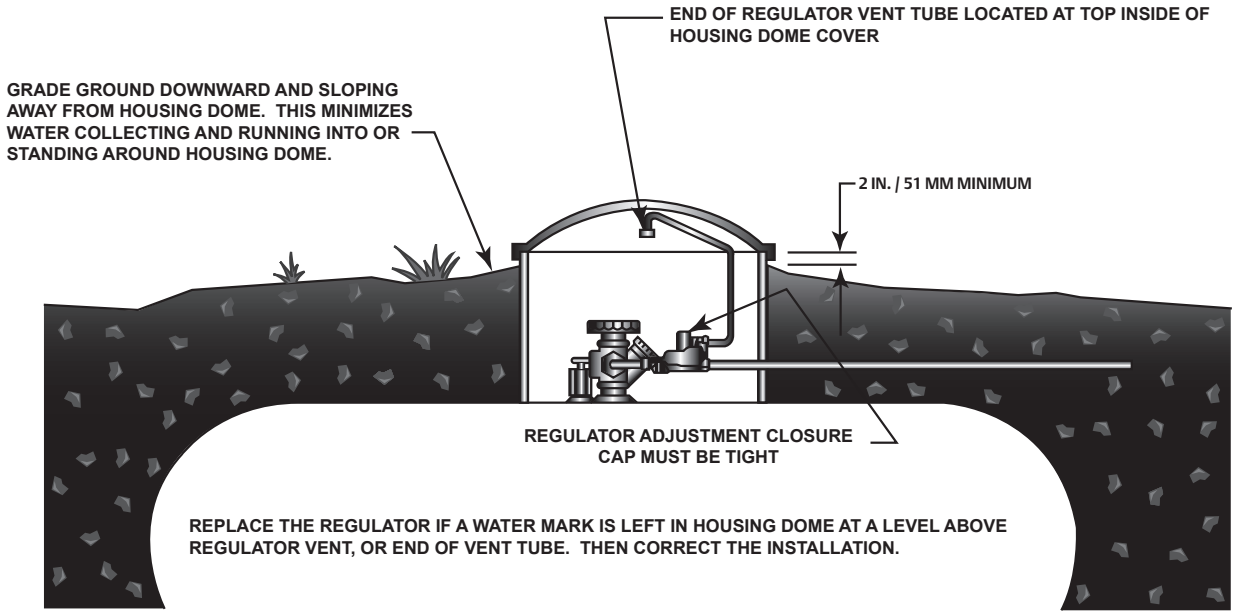

UNDERGROUND INSTALLATION

Regulators Installed in an Underground Container Dome

Regulators, normally a first stage but sometimes an integral two-stage, installed in the dome of an underground container are subjected to a pretty harsh environment -- water, fertilizers, and dirt. These elements can cause excessive corrosion both internally and externally to the regulator. *Therefore, underground installations should be inspected more often for corrosion and signs of water inside or having covered the regulator*. Proper installation will minimize the damaging effects while still allowing the regulator to control pressure.

A vent line is required for each regulator vent—one vent on a first-stage regulator and 2 vents on an integral regulator. The vent line should be installed tightly in the vent and terminate in the top of the dome above the water line in the dome. The vent line should have a “U” bend and be screened at the end. See Underground Installation.

The closing cap should be on tightly to keep water from seeping into the regulator spring case. If the cap is on tight and water still enters, a gasket or sealing material will have to be used to keep water out.

If water is found inside the regulator, the regulator should be replaced.

If extensive corrosion is visible on the casings, the regulator should be replaced.

Flooded Regulators

A regulator that has been in a flood must be replaced. Not only does water get into the regulator, but so do mud and other debris. Also, floating logs, limbs, and other items can physically hit the regulator causing physical damage that may lead to leakage. The water can cause corrosion as previously discussed. The mud can block the internal relief valve opening and also cause the diaphragm to rot and eventually to leak. These things may not cause problems immediately but will create problems months or years after the event.

Internal and External Corrosion

Corrosion problems are particularly acute on regulators installed near coastlines, around large bodies of water and in buried containers. Regulator models, which have worked for many years in a dry climate, will fail sooner when they were submerged in water from time to time or located in coastal areas.

A brief visual inspection of the regulator is sufficient to spot signs of external corrosion. External corrosion is normally found on flange screws and fittings. Normally this is more cosmetic in nature than functionally dangerous.

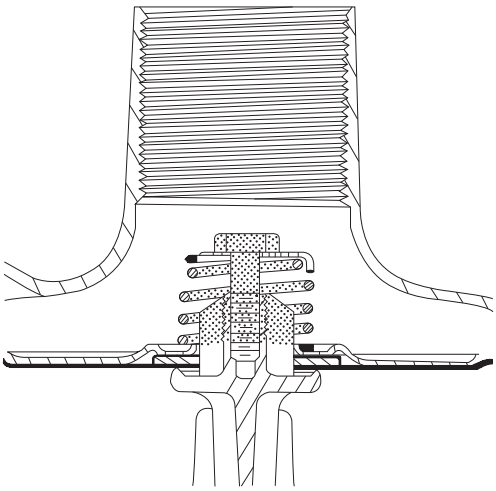

SIGNS OF CORROSION IN THE PUSHER POST AND INTERNAL RELIEF VALVE ASSEMBLY (SHADED AREA)

It takes a more inspection time to find internal corrosion and it is internal corrosion that leads to sudden loss of pressure control. Water accumulating inside the spring case can cause corrosion of internal parts. Eventually the pusher post or internal springs can be destroyed, making it impossible for the regulator to operate. For many regulators, it is possible to inspect for internal corrosion without removing the regulator from service.

To inspect a regulator internally:

1. Remove the closing cap and look down into the spring case. A flashlight may be needed for the inspection.
2. Most adjusting screws have a large hole through the middle so that the relief valve area can be seen. If the adjusting screw does not allow you to see the relief valve parts, then it will be necessary to shut down the system to remove the adjusting screw and spring.
3. Look for visible corrosion or watermarks on the shaded area in figure Signs of Corrosion in the Pusher Post and Internal Relief Valve Assembly (shaded area).
4. Replace the regulator if signs of internalcorrosion are present.
5. Observe normal start-up precautions for lighting pilots and system pressure tightness when turning the system back on and adjusting the regulator.

Chips and Foreign Material

Pipe scale, dirt, and chips of foreign material can also cause regulator problems. These chips sometimes become trapped between the regulator's orifice and seat disc, refer to Dirt Preventing Seat Disc from Moving Close Enough to the Orifice figure, preventing the regulator from locking up (shutting off completely). Pressure then becomes too high downstream when the appliances are shut off. The regulator's internal relief valve then opens to prevent a hazardous pressure condition caused by chips and disc wear, but only if the regulator vent is open.

Chips are most likely to be encountered on new installations where there can be foreign material in the pipe or tubing. Another possible problem area is on weekend or summer homes where gas is shut off for a time and then turned back on; the sudden flow surge in the line could dislodge piping scale.

The best approach is to minimize the effect of chips. Blow out pipe and tubing fittings before installing a regulator or when a cylinder is changed out. Don't reuse old copper pigtails when making new installations because the old copper tube may be brittle or contain scale. Installing second-stage regulators with the inlet pointing down makes it more difficult for chips to enter the regulator inlet and orifice disc interface.

Seat disc indentation can eventually cause pressure variations, but it usually takes a number of years for the disc to become indented enough to give high-pressure difficulties.

If chips or seat indentation damages the regulator's seat disc, the disc has to be replaced. Repaired regulators should be visually inspected and completely tested by qualified personnel before they are returned to service. After the regulator is put back in service, a recheck of the entire system should be conducted.

Regulator Testing

Most regulators can be tested and repaired. A complete regulator test or replacement of parts such as disc, diaphragm, gaskets, or springs will require that the regulator be removed from the gas system. However, a lock-up test, setpoint test, and even a limited flow test can be performed while the regulator is installed on the system without taking the regulator out of service. These tests will give an indication if further testing or regulator replacement or repair is needed because of performance issues.

Most new model regulators have pressure taps that allow easy installation of pressure measuring devices. Use these pressure taps or other pressure tap locations in the system when doing lock-up, setpoint, or a limited flow test.

Refer to your company policy and procedures or contact the factory for additional information on testing regulators.

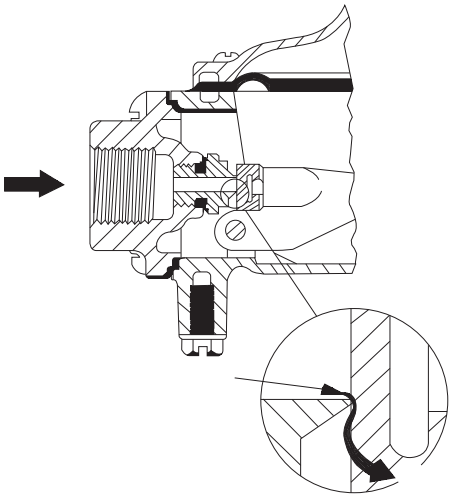

DIRT PREVENTING SEAT DISC FROM MOVING CLOSE ENOUGH TO THE ORIFICE

Setpoint Test

A setpoint test establishes the regulator's setting with a small amount of gas load. Adjust the regulator with a small load (approximately 50,000 BTUs) for a second- stage regulator with a diaphragm casing of about 4 to 5 in. / 102 to 127 mm in diameter. If the setpoint is adjusted with a pilot light load, the accuracy of the setting will vary as the setpoint is too near lock-up. If the setting is made with full load (all appliances are on at one time), the lock-up value during the lock-up test may be too high. Record the pressure gauge reading on the regulator outlet. This is your setpoint.

Lock-up Test

Lock-up is the pressure required to stop flow through the regulator when there is no flow out of the gas system (through an appliance). After adjusting the setpoint, turn off all gas appliances and pilot lights. Record the pressure gauge reading on the regulator outlet. This is your lock-up pressure. The pressure gauge should eventually stop rising. If the pressure continues to increase after about 1 minute, there is a lock-up issue that needs to be fixed.

Limited Flow Test

The limited flow test will tell you the gas delivery pressure with all appliances and gas loads on at the same time. This test is "limited" in that the regulator you are testing is probably capable of supplying 3 or 4 times more gas than the gas system can demand, therefore the term "limited flow test". Record the pressure gauge reading on the regulator outlet. This is your delivery pressure with a high flow rate.

Regulator Repair

In the current economic environment, regulator repair can fall into the realm of diminishing returns. The cost to replace a regulator may be less than the cost for parts, labor, and equipment investment required to repair regulators. Thus, it becomes a company by company decision on repair versus replacing the regulator.

If the regulator is 15 years old or older, just replace the regulator.

Gas Check and/or Other Similar Preventative Maintenance Program

It is imperative that a marketer has a Preventative Maintenance Program for both company owned and customer owned regulators. A Preventative Maintenance Program should schedule the periodic inspection, repair and/or replacement of a regulator prior to its maximum service life or sooner if conditions so dictate. **The PERC Gas Check©** program or another similar Preventative Maintenance Program that inspects, tests and documents the regulator's performance, condition, surroundings and age will be invaluable in preventing a potentially hazardous situation from ever taking place.

It's not very difficult for a serviceperson to make a survey of customer regulators to find the oldest unit. These older units should be inspected for corrosion and aging problems. Regulators of various ages should be examined to get an idea of just how quickly corrosion can become a problem in the particular climate. By doing this a LP-Gas dealer can then identify regulators that need to be replaced.

Questions to Ask About the Regulator Installation

While the following questions may seem obvious and one would think that the situation the question implies could never happen, almost every one of these conditions has occurred. So it is important to reexamine an installation periodically to insure that conditions around the regulator have not changed.

Regulator System Questions

- What type of regulator system is installed?
- Is vapor being piped to the regulator?
- Is there a regulator in the system and is it appropriate for the application?
- Is the final-stage regulator a low-pressure (not a high-pressure or first-stage) regulator?
- For a two-stage or integral regulator system, is there a first-stage and a second-stage regulator?
- If there is only one regulator in the two-stage system, is it an integral regulator that combines both first and second-stage regulators into one construction?
- If this is a 2 psig / 0.14 bar system, is there a first-stage regulator at the tank, a 2 psig / 0.14 bar regulator at the house and a line pressure regulator inside the house?
- On commercial and industrial applications,is the regulator properly sized and does the installation have adequate relief protection?
- Are external relief valve discharge openings open to the atmosphere and protected from the elements?

Regulator Questions

- If the vent is not pointing vertically down, is the regulator covered with a protective cover?
- Does the regulator have a drip lip vent construction?
- If the regulator vent does not have a drip lip design, is an auxiliary vent installed to create a drip lip vent?
- Is the regulator vent or vent line end located at the appropriate distance away from various openings near the regulator?
- Is the line pressure regulator vented properly?
- Is it piped to the outside of the house or does it contain a vent limiter devise?
- Is the vent screen in place?
- Is the vent screen plugged with insect remains or insect nests such as mud daubers or wasps?
- Has the vent screen mesh been painted over with paint?
- Has the regulator been covered with dirt from flowerbeds or fill material?
- Has the regulator been enclosed or covered by a building addition such as a porch or new room? If so, does the regulator need to be moved or a vent line added?
- Is the regulator installed under a roof valley or directly under the drip line of a roof overhang or eave?
- Can snow and ice slide off the roof and cause damage to the regulator?
- Does the regulator need additional protection from the elements such as from excessive snow depths?
- Has the regulator been marked so that it can be found when covered by snow?
- Is the regulator 18 in. / 457 mm above the ground level?
- Is the regulator installed in an area prone to flooding?
- Has the regulator been flooded? If so, replace it.

Indoor Regulator/Vent Tube Questions

- Is the regulator inside a building and if so is there a vent line to the outside open air and is that vent line protected with a screened drip lip vent assembly?
- Is the vent line the same size or larger than the regulator vent pipe connection?
- Does the vent line end have an auxiliary vent assembly that is screened, points down, contains a drip lip construction and does not restrict the relief capacity of the regulator's internal relief valve?

Underground Installations

- Is the closing cap in place and on tight?
- On underground tank regulators, does the regulator have a vent line?
- Does the vent line keep water out of the regulator?
- Does it extend up above the water level?

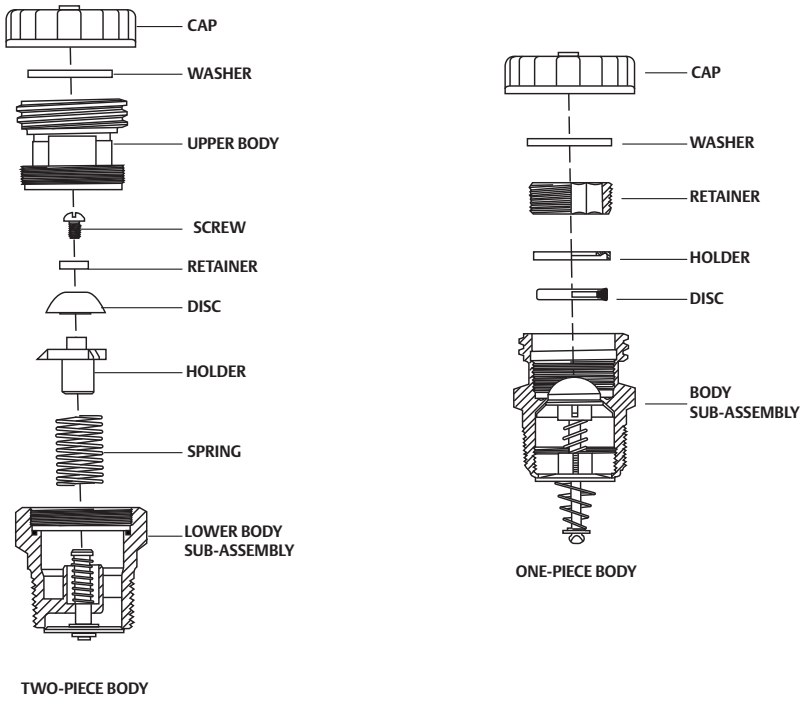

EXPLODED VIEW OF TYPICAL FILLER VALVE CONSTRUCTIONS

Domestic tank fittings, like any other type of mechanical equipment, require periodic maintenance and inspection because operating problems can occur. Tank fittings are of vital importance in the LP-gas system from a safety standpoint since they contain and control the product. Everyone handling LP-gas should be aware that there is a limit to the number of years a tank fitting can remain in service without malfunctioning due to damage and wear. Since this time limit can vary widely due to service coriditions, a periodic inspection routine is especially valuable. The following examines ways to avoid and correct potential safety hazards with the most common domestic tank fittings.

Filler Valves

These valves historically have been subject to more operating difficulties than any other fitting. This is probably because the filler valve must open and close more than other fittings and is subjected to high flow surges, product impurities, and rough handling. Problems occur, of course, when the valve fails to close. The filler valve could stick in the wide open position or permit only a small leak past its rubber seat disc. In either case, a hazardous condition results from the escaping gas and corrective action must be taken.

The serviceman could encounter the valve sticking wide open if he quickly disconnects the hose end connection and finds gas rapidly escaping from the tank. Here would be an extreme hazard because there is no way to stop the escape of gas. Hazards of this type can be avoided by not completely disconnecting the Acme coupling until all pressure is bled off. If the pressure does not dissipate, the filler valve has malfunctioned. Never disconnect the hose end under this circumstance.

If light tapping on the valves does not close it, the tank could have to be emptied before the hose can be disconnected. However, if a filling hose adaptor back check (such as Fisher™ M460 or Rego 7577V) is used between the filler valve and the hose end valve, the adaptor can be left on a filler valve which fails to close. Then the hose end valve can be removed from the adaptor.

At other times, a filler valve may not completely shut off even though pressure does bleed off before the hose end adaptor is disconnected. A small leak past the seat disc can sometimes be discovered only by applying a leak-detector solution over the seat seal and watching for bubbles. Small leaks waste gas and may also create hazards. Of course, all filler valves should be tightly capped when not in use.

Never jab a tool or some other object at the valve's poppet in an attempt to make the filler valve seat. Such attempts can damage the poppet so badly that even changing the seat disc will not stop the leakage, making replacement of the filler valve necessary. Tapping the side of the valve may help it to seat, but don't tap hard enough to further damage the valve. Also never tap on the Acme threads, and never use a tool that could make a spark.

Underwriters' Laboratories require that the seat disc in filler valves be replaceable under pressure. It should be kept in mind that the internal construction of filler valves differs from manufacturer to manufacturer, and use only the correct spare parts for the particular valve. The figures above show how the disc can be replaced in valves of differing construction, i.e., two-piece and one-piece body designs. Since some gas will be lost because of the metal-to-metal lower back check, caution is necessary during disc replacement.

Filler valves of the two-piece body construction should be tested to make sure the lower back check is still functional before attempting to take the valve apart. The test can be made by forcing the upper back check open with a Fisher M450A or Rego's 3120 or 3119 adaptors. Take care to dislodge only the upper back check and not both of the back checks. If there is just a little leakage with the upper back check open, then the lower back check is in place and the disc replacement procedure can commence.

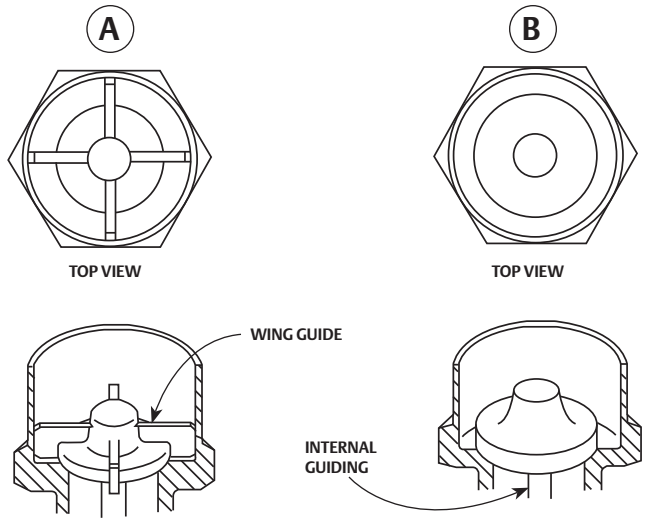

RELIEF VALVE POPPETS WITH INTERNAL GUIDING OR WING STYLE GUIDES

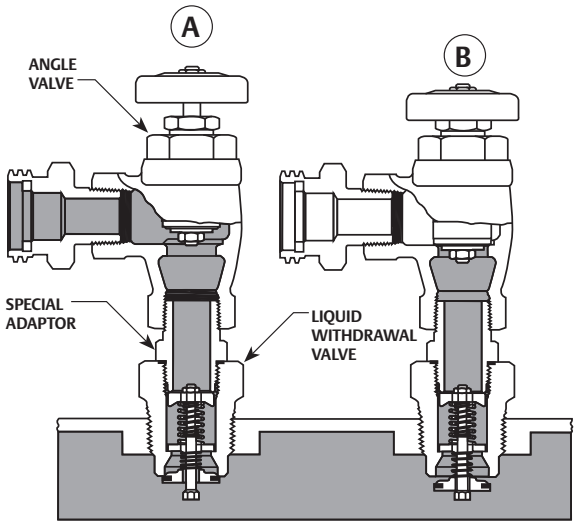

OPERATIONAL DRAWING OF A LIQUID WITHDRAWAL

CAUTION

If the lower check is missing and the filler valve's upper body is unscrewed, there is nothing to contain the LP-gas within the tank and a very hazardous condition results. A few of the older tanks may not have a separate liquid withdrawal valve, indicating that the filler valve also serves for liquid withdrawal purposes. This can be determined by using an adaptor as described above to slightly open the valve's upper back check. If significant leakage occurs, the disc should not be replaced under pressure because the leakage represents too great a hazard.

Relief Valves

The relief valve's purpose is to relieve excessive tank pressure by venting gas until the pressure drops. Excess pressure can be caused by overfilling, improper purging of air, or possibly from overheating of the product. If the relief valve is found to be discharging slightly, check the pressure gauge on the tank. When pressure is in the 240 to 260 psig / 16.5 to 17.9 bar range, the valve is functioning properly by discharging gas. At no time should a person approach or stand directly over a relief valve when tank pressure is high. The valve could pop wide open at any moment, blowing gas, dirt, and other debris into a person's face and eyes.

These procedures are suggested for checking relief valves that leak:

1. Check to see if the valve reseats as tank pressure drops. If it does, the unit is doing exactly what it's intended to do, provided tank pressure was in the 240 to 260 psig / 16.5 to 17.9 bar range. Tank pressure could be lowered by either removing product from the tank or cooling the outside of the tank with water.
2. Do not attempt to force the valve closed! This could cause a tank rupture and will probably damage the relief valve.
3. If you find a relief valve that starts discharging when tank pressure is substantially below 240 psig / 16.5 bar, it means the valve is malfunctioning and will have to be replaced after the tank is emptied.

Water, dirt, and other foreign materials are the enemies of the relief valve because they can damage its poppet and seat. A small drain hole in the lower portion of the upper body has been provided, and this opening should always remain unobstructed. There also should be a raincap placed on the valve to protect it from water and debris. Some relief valves utilize internal guiding for the main stem and appear as viewed from above in Relief Valve Poppets with Internal Guiding or Wing Style Guides, drawing B. Other relief valve styles have wings on the poppet for external guiding, as in Relief Valve Poppets with Internal Guiding or Wing Style Guides,drawing A.

Relief valves with wing guides are especially susceptible to corrosion. The wing guides can become "welded" to the guide surface due to prolonged exposure, preventing the valve from opening as required. If these wing guides are found to be corroded or jammed by dirt, the entire valve needs to be replaced. Relief valves are precisely set by the manufacturer for the correct start-to-discharge setting, and field repair should never be attempted. Since the disc in a relief valve is subject to normal deterioration, Fisher recommends that a relief valve not be used for longer than 15 years (almost all valves carry the date of manufacture). Earlier replacement may be required due to severe service conditions.

Liquid Withdrawal Valves

Tradenamed SafEvac®, Chek-Lok® or Checkmate®, these units are for evacuating liquid from the tank. They are installed on the top, side, or bottom of the container, depending on the internal construction of the tank, and are not intended for use as a normal liquid outlet. During the evacuation process, the unit also acts as an excess flow valve. Most of the liquid withdrawal valves in the field today have metal-to-metal seats, and product loss will take place when making connection to the units.

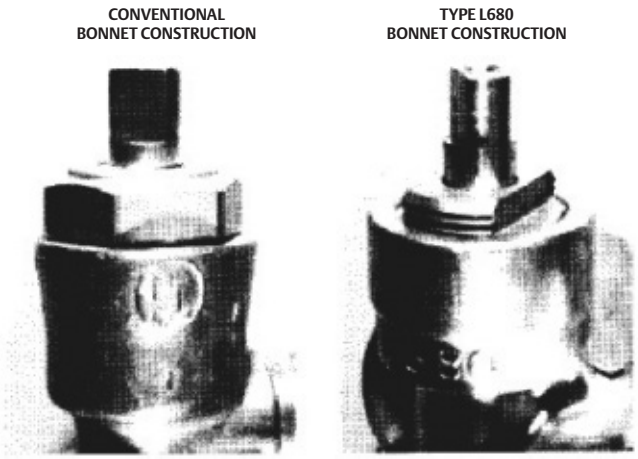

TOP VIEW OF CONVENTIONAL AND TYPE L680 SERVICE VALVE CONSTRUCTIONS

In some cases, a damaged seat may allow an excessive amount of liquid to be discharged when the closing cap is loosened. A bleed hole in the closing cap has been provided to vent the liquid before the cap is completely unscrewed. If a significant amount of liquid continues to be blown from under the closing cap for more than 30 seconds, it can be assumed that the internal seat will not prevent a dangerous amount of gas from escaping. Do not remove the cap if in doubt. This is particularly true if the tank is located in a congested area, such as a mobile home park. Should only vapor be leaking from under the cap, the connection to the liquid withdrawal valve can usually be made.

Most newer designs of these valves contain a soft seat which helps to reduce substantially the amount of liquid or vapor vented when the closing cap is unscrewed. Such a valve is shown in Operational Drawing of a Liquid Withdrawal.

Once the closing cap is removed, it is valuable to have a full understanding of how the valve works. The valves contain a mechanism which is activated by screwing in an unloading adaptor or a pipe nipple. As the adaptor or pipe nipple opens the valve's bleed seat (increasing product leakage through the valve), the main valve poppet opens once the pressure equalizes, as shown in drawings A and B, Operational Drawing of a Liquid Withdrawal. As soon as the adaptor seals to the withdrawal valve, closing the angle valve, Operational Drawing of a Liquid Withdrawal, drawing B, permits the main poppet to open. The system is now ready for liquid withdrawal when the transfer equipment is connected.

The special unloading adaptors for these valves made by different manufacturers have slightly different gasket designs and may leak somewhat if mated to a different brand valve. Instead of the special adaptors, an ordinary 3/4 in. MNPT pipe nipple could be used to open the valve. However, some brands of valves can be damaged if the nipple is screwed in too far so care must be taken if a pipe nipple is used, and the nipple may not seal completely.

A common operating practice is to first attach an unloading adaptor to an angle valve, see Operational Drawing of a Liquid Withdrawal, and then screw this assembly into the liquid withdrawal valve. The angle valve is kept open to prevent the main poppet from opening. As the angle valve-special adaptor assembly is being screwed into the withdrawal valve, the bleed through the withdrawal valve is coming out of the open angle valve (remember the withdrawal valve bleed is being forced open). There's a chance some liquid could spray out of the angle valve as it is rotated. Because of the possibility of liquid spray, proper protective clothing must be worn and extreme care taken throughout the entire process.

Disconnecting the unloading adaptor after tank evacuation also requires care to see that the valve's built-in excess flow shutoff parts were not jammed open by tank debris. The excess flow must be "slugged" shut by sudden discharge and not be allowed to open again while the adaptor is unscrewed. The manufacturer's instruction sheet covers this aspect in more detail.

Service Valves

Valves of this type, called ComboValve®, MultiValve®, or Unipac®, offer fewer potential problems than other fittings, but they still should not be ignored. The customer should be shown this valve and told how to shut it off if gas is escaping into the house or any other abnormal situation takes place.

The service outlet should be checked periodically to see if it will still close (many valves in service today have not been shut off in years). Be sure the handwheel is in place and is accessible. Also examine the stem seal periodically for leakage and replace it if necessary (empty the tank first). The fixed liquid level gauge on the valves will start to show liquid at the 80% level and can be used to check the float gauge reading at that level. If the two don't agree, go by the one that shows the highest filling level until a more thorough inspection and repair can be made.

Fisher™ Type L680 ComboValves are unique because they allow the stem seal to be serviced without first evacuating product from the tank. Closing the valve contains the tank pressure, permitting the bonnet (left-hand thread) and O-ring to be removed and replaced. This greatly reduces the time and cost to repair damaged seals.

The L680 can be recognized by the threaded left-hand bonnet with two milled wrench flats that fit a standard 1/2 in. open end wrench, refer to Top View of Conventional and Type L680 Service Valve Constructions.

CAUTION

All other service valves require emptying all pressure from the tank before attempting repairs.

Conclusion

Vehicles have run into tanks, floods have submerged them, and high winds have tipped them over. There have been instances where children playing on tanks have damaged valves, causing accidents. While the LP-gas dealer is powerless to prevent natural disasters or acts of just plain ignorance, he can establish day-to-day safety practices which will benefit both his business interests and the well being of the customer he serves.

For more information about domestic tank fittings, see the NLPGA Safety Bulletin No. 306-71, "Suggested Regulator and Valve Maintenance." This information, available by writing the NLPGA, comes as a separate bulletin or as a part of the NLPGA Safety Handbook. The various valve manufacturers can also supply product instruction sheets upon request.

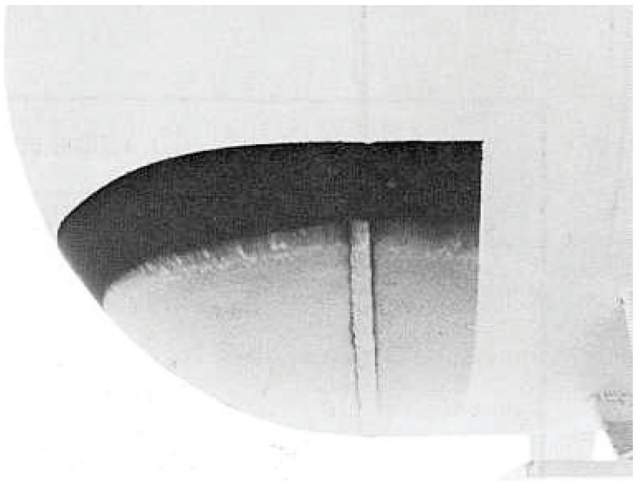

LAYER OF FROST ON UNDERSIDE OF TANK. THE TANK HAS BEEN PAINTED BLACK IN THAT AREA TO MAKE IT EASIER TO IDENTIFY THIS CONDITION.

It's during severely cold weather that the LP-gas system faces it's most serious challenge. These are the times of freezing equipment, low tank pressure, and peak customer demand. The portion of the LP-gas installation put under particular stress by winter conditions is the tank and its vaporization rate. Understanding the factors affecting the capacity of an LP-gas system during cold weather therefore becomes vitally important.

The operation of an LP-gas system depends upon the vaporization of the compact liquid stored in the tank. Expanding in volume as much as 270 times, propane vaporizes into a gas which supplies pressure to move itself through the system before it is finally burned as a fuel. It is this central principle of vaporizing liquid fuel that is so adversely affected by winter temperatures.

The liquid in the container must use the temperature difference between its boiling point and the outside temperature in extracting enough available heat to permit vaporization. When gas is withdrawn from the tank, the pressure is lowered below that of equilibrium, lowering the liquid's boiling point. This action causes more vapor to boil off to restore the pressure. Cold weather results in a reduced tank vapor pressure simply because there is less heat energy In the atmosphere to boil off the liquid fuel into vapor.

Frost Halts System

A tank will meet load demands until gas is removed faster than boiling can replace it. When this occurs, the outside walls of the tank are chilled, inducing precipitation on the walls from the surrounding atmosphere.

During the winter, moisture on the tank surface quickly transforms into frost up to the level of the liquid. As the layer of frost develops, it acts like an insulator on the tank, greatly restricting heat transfer from the surrounding air to the liquid. The system then fails because the vapor pressure falls below that needed for satisfactory regulator performance.

A simple formula governs the vaporization capacity of any given tank. It is as follows:

$$Q = U \times \%A \times (T_1 - T_2)$$

Where:

- Q = Heat transferred from the atmosphere through the tank walls into the liquid (Btuh)
- $U = 2$, which is a coefficient accounting for the convective heat transfer from the air to the tank wall, the thermal conductivity through the wall,and the convection from the inner surface to the liquid (Btu/ft.^{2} hr. °F); 2 is an average number since wind and sunlight affect this factor
- %A = Area of the tank surface up to the level of liquid (ft.^{2}); this is the only portion of the tank transferring significant heat
- $(T_1 - T_2)$ = The difference in temperature between the air temperature, T_1, and the temperature of the liquid in the tank, T_2.

The most important variable in the equation is %A, the "wetted" surface area of the tank, which is dependent upon several factors.

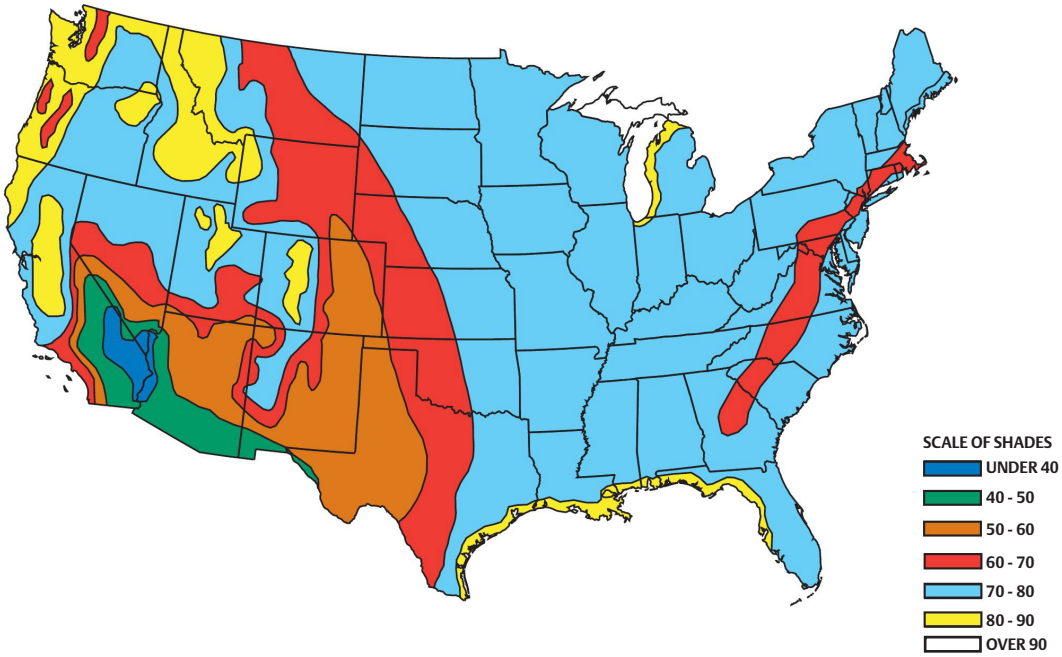

AVERAGE RELATIVE HUMIDITY (%), JANUARY

Wetted Percentage of Total Tank Surface Area

HEAD TYPE	LENGTH TO DIAMETER RATIO	VOLUME PERCENT FULL		
		25%	33%	50%
Flat	2:1	34.41	39.82	50.0
	4:1	35.46	40.54	50.0
	6:1	35.86	40.82	50.0
Elliptical	2:1	34.35	39.80	50.0
	4:1	35.45	40.55	50.0
	6:1	35.86	40.83	50.0
Hemispherical	2:1	34.29	39.77	50.0
	4:1	35.44	40.56	50.0
	6:1	35.87	40.85	50.0

Total surface area for a cylindrical container with hemispherical heads = overall length x outside diameter x 3.14. Total surface area for a cylindrical container with other than hemispherical heads = (overall length + 0.3 outside diameter) x outside diameter x 3.14.

"Wetted" Surface Area Determinants

The greater the physical size of the tank, the more outside surface area it has, directly increasing its vaporization capacity. However, only that portion of the tank in contact with the liquid can transfer heat. This area is found from the volumetric percentage of liquid in the tank and can be easily determined from the liquid level gauge. The liquid level itself is affected by two other factors: (1) the ratio of the tank's length to its outside diameter, and, less importantly, (2) whether the tank heads are flat, elliptical, or hemispherically shaped. Wetted Percentage of Total Tank Surface Area table demonstrates the effect of the various parameters on the percentage of wetted surface area.

Temperature Differential

Another important consideration in the vaporization equation is the temperature differential between the liquid in the tank and the atmosphere. As mentioned previously, this differential determines the amount of heat available to the liquid. Not all of the heat, however, can be used. A humidity correction factor limits the amount of available heat that can be extracted from a given temperature differential.

As air temperature decreases and relative humidity increases, the usable temperature difference reaches a minimum. This is because the cold air surrounding the tank becomes saturated with water vapor at high humidity levels, making precipitation form on the

Difference Between Air Temperature and Temperature of Frost Formation								
AIR TEMPERATURE, °F	RELATIVE HUMIDITY							
	20%	30%	40%	50%	60%	70%	80%	90%
-30	---	---	---	---	8.0(1)	5.0(1)	2.5(1)	1.0(1)
-25	---	---	15.0(1)	11.0(1)	8.0(1)	5.0	3.0	1.5
-20	---	20.0(1)	15.0(1)	11.5(1)	8.5	5.0	3.0	1.5
-15	---	20.0(1)	15.5	12.0	8.5	5.5	3.0	1.5
-10	27.5(1)	20.5	16.0	12.0	9.0	6.0	3.0	1.5
-5	28.0(1)	21.0	16.0	12.0	9.0	6.0	3.5	2.0
0	29.0	21.5	16.5	12.5	9.0	6.0	4.0	2.0
5	29.5	22.0	17.0	13.0	9.0	6.0	4.0	2.0
10	30.0	22.5	17.0	13.0	9.5	6.5	4.0	2.0
15	31.0	23.0	18.0	13.5	10.0	7.0	4.0	2.0
20	31.5	24.0	18.0	14.0	10.0	7.0	4.0	2.0
25	32.5	24.0	19.0	14.5	10.5	7.5	4.5	2.0
30	33.0	25.0	19.5	15.0	11.0	8.0	5.0	3.0
35	34.0	26.0	20.0	16.0	11.5	8.5	5.0	3.0
40	35.0	27.0	21.0	16.5	12.0	9.0	8.0	8.0

1. If the full temperature difference is used in these cases, the minimum tank pressure may be too low for satisfactory performance. Reprinted with permission from A Practical Guide to LP-Gas Utilization.

Heat (Btu) Needed to Vaporize 1 pound Propane								
TEMPERATURE, °F								
40	30	20	10	0	-10	-20	-30	-40
159.0	162.0	165.0	168.0	170.5	173.5	176.0	179.0	181.5

Tank 25% Full at 40% Relative Humidity Maximum Continuous Withdrawal Rate (Btuh) Without Tank Frosting If Lowest Outdoor Temperature (24 Hour Average) Reaches:								
TANK SIZE, GALLONS	LOWEST OUTDOOR TEMPERATURE (24 HOUR AVERAGE), °F							
	40	30	20	10	0	-10	-20	-30
150	84 740	77 280	70 500	65 580	62 740	59 910	55 400	29 430
250	113 570	103 570	94 480	87 890	84 090	80 300	74 260	39 440
500	188 760	172 150	157 040	146 080	139 760	133 460	123 420	65 550
1000	336 230	306 640	279 720	260 200	248 940	237 730	219 840	116 760

1. For a tank at 1/3 full, multiply Btuh values by 1.144.
2. For a tank at 1/2 full, multiply Btuh values by 1.41.

Tank 25% Full at 80% Relative Humidity Maximum Continuous Withdrawal Rate (Btuh) Without Tank Frosting If Lowest Outdoor Temperature (24 Hour Average) Reaches:

TANK SIZE, GALLONS	LOWEST OUTDOOR TEMPERATURE (24 HOUR AVERAGE), °F							
	40	30	20	10	0	-10	-20	-30
150	33 000	20 360	16 020	15 760	15 510	11 460	11 290	9 270
250	44 230	27 290	21 480	21 120	20 790	15 360	15 130	12 420
500	73 510	45 360	35 700	35 100	34 550	25 530	25 150	20 640
1000	130 940	80 790	63 580	62 530	61 540	45 480	44 800	36 770

1. For a tank at 1/3 full, multiply Btuh values by 1.144.
2. For a tank at 1/2 full, multiply Btuh values by 1.41.

slightly colder tank surface. At winter temperatures the precipitation immediately turns into frost. As can be seen from Difference Between Air Temperature and Temperature of Frost Formation table, there is only 1°F temperature difference between the air and the tank with a -30°F air temperature and 90% relative humidity. Going the opposite direction, a low humidity of 20% together with an outside temperature of 40°F gives 35° of usable temperature differential.

Take, for example, a 500-gallon tank with hemispherical heads and an overall length-to-diameter ratio of 4:1 that has a total surface area of 97 ft.^{2}. The tank is located in a region where the lowest average temperature is -10°F and the average relative humidity is 80%. (See Average Relative Humidity (%), January for a map showing typical relative humidities for various regions of the United States.) Under these conditions, how much fuel can the tank vaporize without frost build-up if it is one-quarter full?

Using the equation, $Q = U \times \%A \times (T_1 - T_2)$, we find:
$U = 2$

$\%A = 97$ ft.$^2 \times 35.44$
(% of total surface area wetted from Wetted Percentage of Total Tank Surface Area table)

$(T_1 - T_2) = 3$
(°F, usable temperature difference from Difference Between Air Temperature and Temperature of Frost Formation Table)

Plugging these numbers into the equation produces a Q value of 206.3 Btuh. Table 3 shows the Btu's needed to vaporize 1 pound of propane at various temperatures. At -13°F (-10°F atmospheric + -3°F usable temperature difference) it can be interpolated from that table that it takes 174.25 Btu to vaporize 1 pound of liquid propane.

Therefore:

206.3 Btuh -174.25 Btu/lb = 1.18 lbs/hr (vaporized fuel)
Vaporized propane = 21,591 Btu/lb
1.18 lbs/hr x 21,591 Btu/lb = 25,562 Btuh
(the amount the tank can vaporize under these conditions)

If the 25,562 Figure seems exceptionally low, it's because the high humidity limits the available heat range to a scant 3 degrees for continuous service. Also, the wetted surface area of the tank is small when it is only one-quarter full. Under intermittent loading, the capacity for the tank might be three to four times greater.

Vaporization Capacities

Tables 4 and 5 are generalized listings showing the vaporization capacities of standard size tanks of the 4:1 ratio, one-quarter full, and at 40% and 80% relative humidities. The tables show maximum continuous withdrawal rates that can be achieved without tank frosting taking place. Note the dramatic reduction in tank vaporization capacity with the 80% relative humidity (Tank 25% Full at 80% Relative Humidity Maximum Continuous Withdrawal Rate (Btuh) Without Tank Frosting If Lowest Outdoor Temperature (24 Hour Average) ReachesTable).

In sizing tanks to prevent a winter time overload, it is apparent that four factors should be prime considerations

1. The size of the tank
2. The lowest normal temperature expected
3. The mean relative humidity
4. The lowest percentage volume level the tank will be allowed to reach

This means that for older installations merely maintaining a higher fuel level in the tank will appreciably boost the vaporization rate. When all of the elements of the capacity equation are given proper consideration, the LP-gas system is better prepared to operate effectively through its most challenging period.

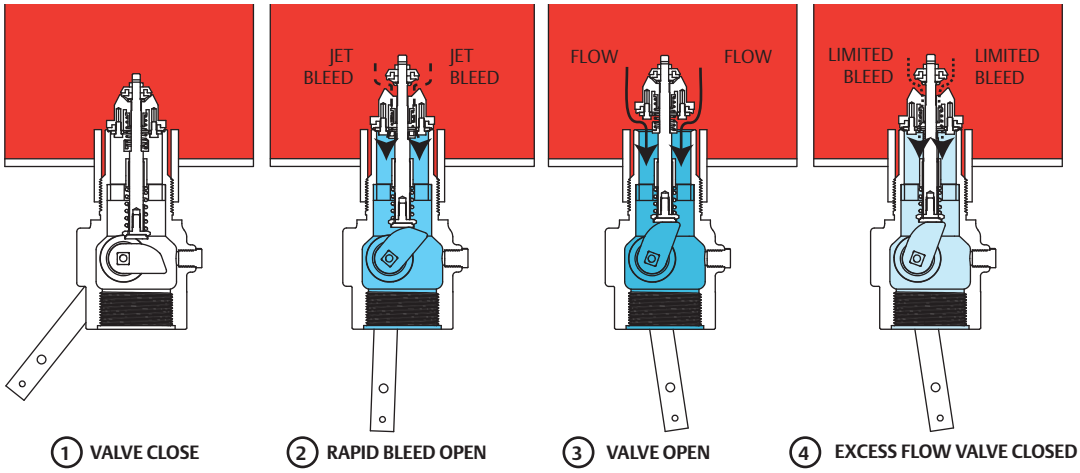

OPERATIONAL SCHEMATIC OF A TYPICAL FISHER INTERNAL VALVE

Introduction

Internal valves are one of the most important elements in a bobtail or transport truck's transfer system. While Fisher internal valves are widely used on trucks hauling LP-gas–as well as other compressed gases–some drivers and maintenance mechanics run into problems when they don't completely understand how the valves work. This bulletin brings out four points about Fisher internal valves: (1) recommended operation, (2) correct installation of valve actuators, (3) proper maintenance, and (4) trouble shooting tips.

Operation

Moving a Fisher internal valve's operating lever to the fully open position does not open the main poppet immediately. Instead a pilot equalizing valve is opened to allow tank pressure to bleed downstream.

Referring to the schematic, the shutoff portion of the valve is held closed by both tank pressure and the closing spring (illustration 1). Positioning the operating lever about mid-point in its 70° travel (illustration 2 in Figure 1 and Figure 2) places a smaller section of the valve's stem in the pilot bleed opening. Pressure can equalize much faster in this position, called "rapid equalization," than if the lever was fully opened.

After a few seconds, a click can be heard indicating that pressure has equalized on both sides of the main poppet and that the poppet has opened (illustration 3). The operating lever can now be moved to the full open position. If, during product transfer, flow exceeds the rating of the excess flow spring, the main poppet closes (illustration 4).

WARNING

Failure to inspect and maintain internal valves and their remote actuating control systems may result in the valve failing to close in an emergency, leaving no way to control the discharge of product. Inspection and maintenance must be performed frequently enough to assure that the valves are operating properly.

The amount of time for the pressure equalization to take place depends on several factors. Among them are:

1. The volume of the downstream line to be pressured through the internal valve. (How near is the next closed line valve?)
2. The tank pressure.
3. The downstream line pressure when the operating lever is opened. If this line is left "wet," the internal valve will usually open immediately.
4. The amount of foreign material plugging the bleed channel.

Unusual temperature conditions can also affect the equalizing time. Sometimes the actual temperature of the propane in the truck can be quite a bit higher than the ambient temperature (if a cold front comes through, for example). Under these conditions the propane that bleeds through the valve is cooled in the downstream piping. Due to the lowered vapor pressure of the cooled gas, the downstream pressure will stay lower than the tank pressure until the piping fills completely with liquid. This process could take a long time; the condition, luckily, happens very rarely.

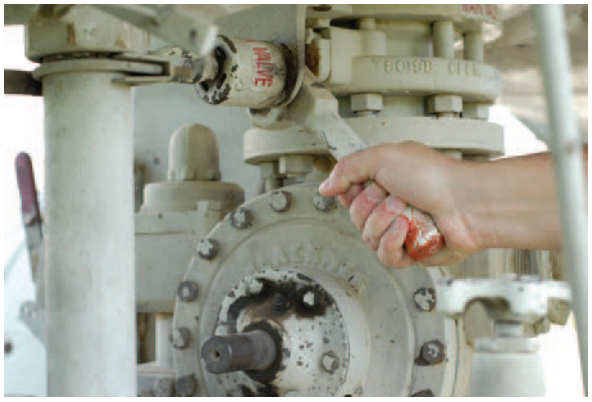

MOVING THE VALVE OPERATING LEVER HALFWAY OPEN GIVES FASTER EQUALIZING



TO OBTAIN FULL OPERATING LEVER TRAVEL WITH SOME CABLE CONTROLS, THE CABLE HAS TO BE ATTACHED CLOSE TO THE HANDLE PIVOT

It's important to follow the correct sequence of actions when unloading. The recommended sequence for transports would be:

1. Lock the truck brakes. Chock and connect ground wires as needed.
2. Connect the transfer lines, leaving the in-line valves closed.
3. Open the internal valve. On "rapid equalizing" valves, hold the operating levers about halfway open for a few seconds for best equalizing results. Air actuated valves will equalize faster if opened and closed a few times during the equalizing process.
4. After the internal valve opens, gradually open the downstream line valves and allow the lines to fill.
5. Finally, start the pump or compressor to begin the transfer operation.

Since bobtails normally leave the piping pressurized, little or no pressure equalization time is required. Also, there are fewer in-line valves to worry about on bobtails.

Some drivers will claim this sequence too slow and involved, but the few additional seconds it takes will prevent a lot of premature valve closing, pump cavitation and wear, and time lost repeating some other sequence that is not effective.

Note

In the event of an accident during product transfer, it is essential that the attendant activate the remote closure control of the valve. Remote closure controls are the primary safety device for a product transfer system. In most transfer accidents no internal valve, regardless of make, will close unless the valve's closure controls are activated. This is why the attendant should be located so that he has access to the closure controls throughout the transfer operation.

Valve Actuator Installation

A problem that could be experienced with internal valves is the failure of the actuating device to move the valve's operating lever far enough open. Insufficient travel permits the built-in excess flow valve to close once the transfer operation begins. Often times the operator thinks the valve lever has been traveled to the wide open position and ignores looking into this possibility as a solution to the trouble.

Cable controls are by far the most popular method of actuating internal valves, both on bobtails and transports. The operating lever on Fisher valves swings through a 70° arc (90° on 1-1/4-in. valves) from the closed to the fully open position. The cable control must move the lever to within 5° of the fully open position to avoid premature excess flow valve closure. A number of manufacturers, including Fisher, make cable controls and a few truck fabricators produce their own. No matter whose control is used, the cable slack has to be adjusted so that the control moves the valve operating lever the correct distance.

The various controls give differing amounts of cable travel. Fisher's current cable control has latch positions for 4, 5 and 6 in. / 101, 127 and 152 mm travels. Thus the internal valves which are intended to mate with the Fisher control have an operating lever of a length that gives the correct 70° turn with this amount of cable travel. Some of the other widely used cable controls have a travel of only 1-1/2 to 2 in. / 38.1 to 50.8 mm). In order to achieve the full 70° travel with these controls, the cable attachment point on the operating lever must be moved closer to the handle pivot. At times the cable attachment point has to be made only 1-1/4 to 1-1/2 in. / 31.8 to 38.1 mm down from the pivot, depending on the make and type of cable control.

Cable stretch after installation can cause problems for a control with a short travel. For instance, a 1/4 in. / 6.35 mm cable stretch after final adjustment results in 17% less operating lever movement (down to 58° rotation) with a control traveling 1-1/2 in. / 38.1 mm. The same 1/4 in. / 6.35 mm stretch with a 6 in. / 152 mm travel reduces operating lever movement just 4% (a 67° rotation).



THE CABLE SHOULD BE AT A RIGHT ANGLE TO THE OPERATING LEVER AT THE MID-TRAVEL POSITION.



WIRES LIKE THIS INDICATE A LACK OF VALVE MAINTENANCE.THEY ARE USED TO HOLD THE OPERATING LEVER OPEN–A VERY BAD PRACTICE.

Over-tightening the cable can also be bad. Most internal valves come to a positive stop internally at the full open position. If the cable is adjusted too short and the stop is reached before the control travels to its latching point, a great deal of force is applied to the valve mechanism by strong-arm attempts to latch the cable control. On some controls with a high mechanical advantage, several hundred pounds of cable pull can be developed. This kind of force can damage the valve's internal parts.

Check the "pull angle" of the cable when routing and attaching it to the lever. At the mid-travel lever position, (see figure above) the cable should pull at a right angle to the lever. Because the control cable may have some drag, be sure to use a return spring on the lever. Protect the cable linkage from the elements with a rubber boot or some other means.

Fusible links, of course, must be installed at both ends of the control cable. Make certain to use links with a load capacity equal to the task. Cable controls with short travels may require fuse links with a higher load capacity than those with longer travels.

Air cylinders and hydraulic fluid systems are other ways of actuating internal valves. Here the clevis on the cylinder rod can be adjusted to move the valve lever to the fully open position (the entire 70° or 90° arc). Air interlock systems with the truck brakes give excellent ease of operation in addition to increased safety.

Test air operated valves for closure periodically. Doing this will reveal if wear or dirt in the air cylinder and linkage would keep the valve from closing. The linkage from the air cylinder to the valve lever should also be protected from mud, dirt, ice and road splatter. And be sure the fusible elements are installed in the air line that opens the valve.

Maintenance

It's human nature to disregard things that aren't causing problems. The trouble with this attitude, especially where internal valves are concerned, is that when things go bad they can create difficulties of enormous proportions. Maintenance and inspection programs help to prevent sudden equipment failures which leave a costly bobtail or transport inoperative.

Much too often the only maintenance an internal valve gets takes place when the valve is suspected of slowing or impeding product transfer. There can be a tendency to make a "temporary fix" which then becomes permanent if product transfer hasn't been slowed down. One such temporary fix is the use of a coathanger wire to hold the valve lever open (see figure above). Obviously such a maneuver destroys the ability of the valve to function as designed. **Never wire open an internal valve**. It is an unsafe, unnecessary, illegal, and a highly dangerous practice.

A simple preventive maintenance program for the valve and its controls will eliminate a whole bunch of problems, and it takes very little time. Take a few minutes when the truck is having its oil changed or whatever to look over the valves and the controls. Fisher recommends these steps be conducted at least once a month and more often in harsh environments:

1. Inspect the operating lever to see that it moves freely and smoothly. Also examine the stub shaft bonnet nut for leakage using a soap solution. If there is leakage, the bonnet packing will have to be replaced. Replacement shaft seals are inexpensive and easy to store. Although they are seldom needed, it pays to keep them on hand. A sticking lever indicates mechanism wear or trapped dirt. This could mean the need for new shaft seals, shaft bushings, stem bushings, or a few other things. It's time, in other words, for repair before the trouble gets worse and the valve won't open (or close!) with a tank full of product.
2. Check for tight closure of both seat discs. With the internal valve closed, exhaust downstream pressure. If piping is cold, allow it to warm to ambient temperature. Then close the first downstream valve and note any pressure build-up between the two closed valves with a pressure gauge. If leakage is indicated, both discs should be replaced. This test can reveal some odd and scary things. An owner of a second-hand transport had shutoff problems with the internal valve. It seems the previous owner, faced with an excess flow rating below his normal pumping rate, had removed all the shutoff parts from the valve!
3. All operating controls should be inspected and cleaned and oiled. The controls should be checked to see that they fully open – but not overtravel – the internal valve operating lever and work freely to close the valve. If wear is detected that could cause trouble later, order replacement parts now.

Trouble Shooting

All of the foregoing won't completely eliminate the chance of some sort of valve malfunction. Parts in equipment like internal valves which receive almost daily use do eventually wear out. Many times, however, the valve gets the blame when some other component in the system is actually the culprit.

Trouble shooting the valve isn't too difficult; the most useful tool for the trouble shooter is a pressure gauge installed at the valve outlet. When the valve is opened, the gauge should show the same pressure as in the tank. With flow through the valve, this gauge should always read within a few psi of the tank pressure.

Four common complaints are listed below along with possible solutions:

Internal Valve Will Not Open – Most frequently due to the operator not using the rapid equalizing position when opening the valve, could also be from leakage downstream, engaging the pump too soon, or excessive internal valve wear. (On older valves cam breakage did occur at times, but it has all but been eliminated now). If excessive volume is in the downstream system, a longer time is required to equalize tank and downstream pressures before the pump can be engaged.

To find out if the valve pilot seat is opening, install a pressure gauge at the valve outlet and open the valve. If pressure does not build up to the tank pressure, the pilot seat is not opening. This test should be done with the pump off. A pilot seat not openlng may be due to internal damage or from foreign material plugging the pilot bleed opening. Try back flowing through the valve to clear it out. If the operating lever rotates past the fully open position, there is something wrong internally and the valve will have to be disassembled.

Premature Valve Closure – An improperly connected operating lever which doesn't fully open the valve (see the "Installation" section) is the first thing to look for. This condition could also be caused from engaging the pump too soon, sudden line surges, or an underrated excess flow spring. The trouble could stem from a valve that has its inlet port obstructed.

Internal Valve Will Not Close – Most frequently due to a faulty or sticking actuator, but the stub shaft or stem could be bent. If the valve leaks even though it seems to close, the seats could be damaged or foreign materials could be trapped on the seats. Before disassembling the valve, check the actuator mechanism to see that it works freely by disconnecting it from the valve lever and cycling it several times. Also, operate the valve lever manually. If it sticks in the open position, the packing and bushings should be replaced which should free the operating mechanism if the valve does not have internal damage.

Low Flow Capacity – First, is the valve large enough? Too small or long downstream piping might be being used. Other possibilities include a plugged screen or strainer, some restriction downstream, or a bypass valve sticking in the open position. The bypass valve could also be set too low and be opening prematurely. Check for high differential pressure across the internal valve to determine if it is at fault.

Conclusion

Internal valves were first introduced in the 1950's. Since that time, they have gained ever increasing acceptance from users, as well as regulating agencies. The valves of today are greatly improved from a performance and durability standpoint from those of ten or even five years ago. They are capable of giving years of trouble-free service, but they do require minimal attention if they are to remain on the job. This article has attempted to point out ways of keeping the valve working properly so that the truck can stay on the road.

Flood Damaged Regulators and Valves

To prevent serious accidents and personal injuries, any Fisher™ equipment covered by floodwaters should be replaced. Periodic flooding of regulators and tank valves can create a potentially hazardous condition in an LP-Gas system both during the flood and long after the floodwaters have receded. An accident could result if the product should eventually fail either during the flood or at some length of time after the floodwaters have receded.

Regulators

Floodwaters that cover regulators can result in potential hazards such as:

1. Increased pressure caused by the height of the water adding additional force to the topside of the regulator diaphragm and thus raising the outlet pressure. This can occur when the regulator is covered and the appliances are not flooded and thus still operational. This can also occur after floodwaters have receded and if the regulator is installed so that water inside the spring case can not drain out.
2. Dirt and debris settling into the spring case and restricting diaphragm movement or preventing the relief valve from opening if needed.
3. Diaphragm deterioration and internal part corrosion can result in regulator failure months or years after the flood.

Internal damage will not be noticeable by looking at the exterior of the regulator. The regulator's outside appearance may not give any indication of the internal damage. Therefore it is safest to replace the regulator.

Tank and Cylinder Valves

Any valve on a tank or cylinder, such as relief valves, service valves, fill valves, bleed valves, and combination valves can be contaminated by the dirt and sediment that may settle into working parts, get trapped under ACME caps and rain caps on relief valves.

If this debris hardens it can prevent relief valves from opening. If the dirt is forced into tanks during the use of a tank valve, it may prevent the tank valve from closing, i.e. filler valves and relief valves. The dirt may even eventually be carried into the vapor system through the regulators and into appliance controls.

Tank and cylinder valves should be carefully inspected and debris removed. If there are questions as to the continued safe use of the valves, they should be replaced.

Customer Propane Gas Lines

When replacing regulators, the propane gas lines should be thoroughly cleaned and blown out to ensure that water and contaminants do not enter the regulator and appliance controls.

Bulk Plant Equipment

Bulk plant equipment should be checked to ensure that cable controls to internal valves and emergency shutoff valves are still operational and not corroded or filled with sediment. Valves should be cleaned and checked for proper operation. Gland packing on internal valves and globe and angle valves should be checked for leakage or damage caused by water and sediment.

Relief valves, hydrostatic relief valves, bypass valves, and other product that can collect water should be cleaned, inspected and replaced as necessary.

Unused inventory should be assessed for water damage and disposed of as necessary so as not to replace flooded field product with flooded new and unused product from a dealer's warehouse.

Additional information for LP marketers and customers can be obtained from the PERC brochure, "Keeping Your Family Safe - Important Information about Propane Safety and Floods".

Two-Stage Systems Give More Uniform Regulation, Better Relief Protection and Reduced Trouble Calls

The LIQUIFIED PETROLEUM GAS CODE, NFPA 58 requires that "A two-stage regulator system, an integral two-stage regulator, or a 2 psi regulator system shall be required on all fixed piping systems that serve 1/2 psig / 3.4 kPag appliance systems [normally operated at 11 in. w.c capacity (2.7 kPag) pressure]." Two-Stage systems are required on new piping installations or if a single stage piping system is changed, then it must be upgraded to a two-stage system. Single stage regulators can now only be installed on small portable appliances and on outdoor cooking appliances with input ratings of 100,000 BTU/hr or less.

A two-stage regulator system provides a higher level of performance than a single stage regulator system. Single stage regulators in domestic and on nearly all commercial/industrial installations do have their limitations.

The Two-Stage Advantage

With a two-stage system, a first stage regulator supplies a nearly constant inlet pressure (approximately 10 psig) to a second stage regulator. This means the second stage unit does not have to compensate for widely varying inlet pressures, conceivably as high as 200 psig in the summer and as low as 10 psig in the winter, but can provide nearly constant pressure, typically within +/- 1/4 in. w.c., to the appliance under varying load conditions. A single stage regulator's outlet pressure will deviate more from 11 in. w.c.because of the widely varying tank inlet pressure. A more common pressure fluctuation due to inlet pressure change would +/- 1 in. w.c.

If the piping distance between the tank and the house is less than 30 ft, an integral regulator is probably sufficient for most loads without having to use a large pipe or tubing size. However, if the distance between the tank and house is greater than 30 ft, a smaller pipe or tubing can be used between the first and second stage regulators due to the higher intermediate pressure, and thus the potential to save on piping costs.

Better Overpressure Protection in an Emergency

The internal relief valve on a single or second stage regulator can provide adequate over pressure protection for a regulator that may not lockup because of a worn disc or debris stuck on to the valve disc. However, only a large capacity relief valve in a second stage regulator can limit downstream pressure to 2 psig to the appliance if there is a mechanical failure in the regulator. Such performance is accomplished because the first stage is presumed to be operational and still providing 10 psi to the second stage regulator. Thus the second stage relief valve doesn't have to be sized for the full 250 psi tank pressure.

For large Commercial/Industrial systems, most of the regulators used for first and second stage service do not have internal relief valves and if they do, they typically only provide minimal relief protection. Therefore, for large commercial and industrial applications, external relief valves or other means of overpressure protection will have to be installed between the first and second stage regulators and also downstream of the second stage regulator to provide the 2 psig overpressure protection required by NFPA 58.

Regulator Freeze Ups Minimized

A two-stage regulator system provides gives better resistance to internal regulator freeze-ups (ice build-up just before the orifice) from water in the gas because:

- A larger orifice can be used in the second stage regulator;
- Pressure reduction occurs at both the first and second stage regulators, creating less cooling and more heat transfer into each regulator;
- Most second stage regulators are mounted on the side of the wall with the inlet piping coming up out of the ground. This orientation allows any condensed moisture to drain away from the orifice, the coolest part of the regulator during pressure reduction.

With minimal pressure drop at the second stage orifice and moisture draining away from the larger second stage orifice, it becomes more difficult for water to freeze in the second stage regulator.

Fewer Trouble Calls

You can expect fewer customer trouble calls due to regulator freeze-ups, pilot outages and erratic appliance performance with a two-stage system.

Make These Checks When A Bobtail or Transport Pumping System Doesn't Work

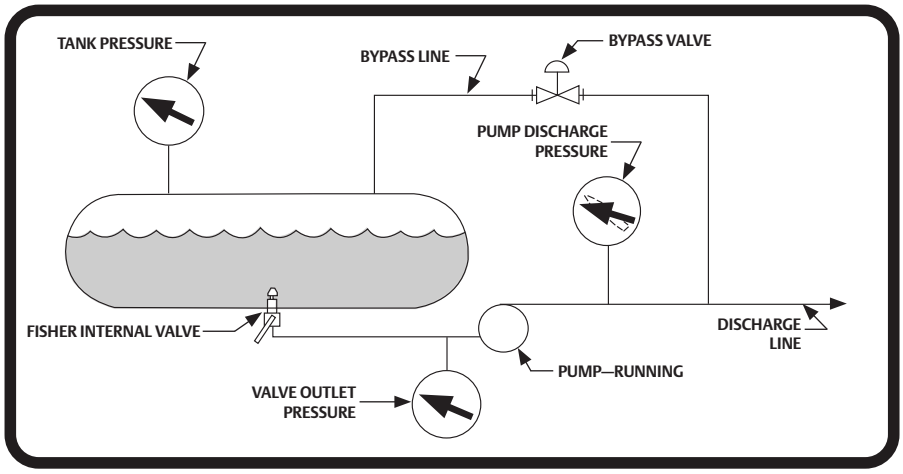

Troubleshooting Truck Pumping System

PROBLEM	POSSIBLE CAUSE	REMARKS
Tank and valve outlet pressure remain the same, pump discharge pressure drops	Pump or bypass valve	Bypass valve could be stuck in open position or there could be a pump problem. Close the manual bypass line in order to check. As long as valve outlet pressure stays nearly the same as tank pressure, the internal valve is all right.
Valve outlet pressure drops suddenly	Closure of internal valve or blockage of internal valve inlet	Stop pump and attempt to reequalize valve. If problem persists, check operating lever travel (lever should move to a stop in the fully open position). Attempt pumping back through the valve (if possible) to clear out obstructions inside the tank.
Pump discharge pressure increases but product does not transfer	Downstream piping	Downstream piping is clogged or a valve is closed somewhere in the downstream piping system.
Tank and valve outlet pressure slowly drop, pumping rate slows	Vapor return line	Vapor return line too small, boiling product causes the pumping rate to decrease.

A truck that's unable to pump-off its load needs prompt attention, and the correct trouble shooting procedures can save a lot of time and money.

The internal valve sometimes gets the blame for the problem when actually the valve is being operated incorrectly or some other component in the system is at fault. Removing a properly working interval valve is obviously a waste of time.

In order to check out a pumping system, pressure gauges should be installed at the tank, the internal valve outlet, and the pump discharge line, see the schematic drawing.

The schematic shows a truck pumping system operating properly. When the internal valve opens, the tank and valve outlet pressure are at about the same pressure (there may be a slight difference in the gauge readings). Starting the pump increases the pump discharge pressure while the tank and valve outlet pressure stay within a few psig of each other.

Refer to the table when deviations from normal pressures take place. For more information on Fisher internal valve operation, contact us or see the Fisher™ distributor in your area.

Correct LP-Gas Regulator Installation Can Improve Safety, Give Longer Life

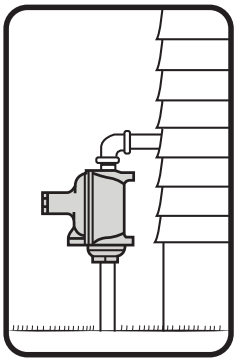

Second stage regulators should always be installed with the vent pointing down. This reduces the possibility of freezing rain or sleet plugging the vent. It also makes it more difficult for foreign material (pipe scale, dirt) to enter the regulator.

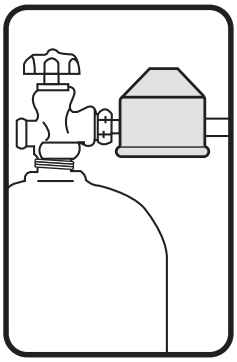

On single cylinder or domestic tank installations, it is frequently impossible to point the regulator's vent vertically down. Here an encasement or hood will be needed to protect the vent from the elements. Be sure the tank hood completely covers the vent.

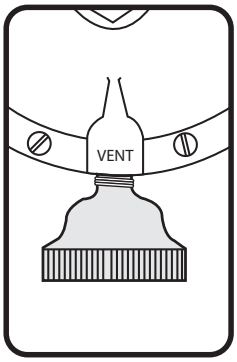

On single cylinder or domestic tank installations, it is frequently impossible to point the regulator's vent vertically down. Here an encasement or hood will be needed to protect the vent from the elements. Be sure the tank hood completely covers the vent.

When making new installations or updating old ones, the regulator's vent is an important consideration. It affects both the safety and the service life of the installation.

Keeping Vents Unplugged

The vent has to remain open in order for the regulator to work properly. Freezing rain is the most common source of vent blockage. If the vent does become plugged, it could allow: (1) High pressure gas to register at the appliance, or (2) The appliance pilot lights to be extinguished. Either instance could result in an explosion and fire.

Nearly all domestic single stage and second stage regulators produced today have "drip lip" style vents. These units resist plugging by freezing rain when installed with their vent pointing vertically down. On installations where it's impossible to point the vent vertically down, a hood or encasement should be used.

Extending Service Life

Condensation can build up inside the regulator's spring case. After several years–it doesn't take place overnight–the condensation may corrode the internal parts of the regulator, causing a sudden regulator failure.

Corrosion problems are another reason for pointing the vent vertically down wherever possible. In this way, any condensation that forms can drain out the vent instead of accumulating inside the regulator.

Extending Service Life

Safe, trouble-free installations begin with a correctly installed regulator, whether the unit is a Fisher or another brand. Realizing the importance of the regulator to any LP-gas system, Fisher™ makes available a variety of free literature about regulators. Besides installation information, the literature covers operation, inspection, and maintenance. Contact us or see the Fisher distributor in your area.

WARRANTY AND LIABILITY

In consideration for the discount pricing offered above, the following terms and conditions are accepted by Distributor and shall apply to all products subject to this pricing sheet ("Goods"). Distributor shall extend these limited warranty and limitation of liability provisions, in their entirety and without change, to customers and end users of the products.

1. Limited Warranty: Subject to the Limitation of Remedy and Liability below, Emerson Process Management Regulator Technologies, Inc. ("RTI") warrants that the Goods manufactured by RTI will be free from defects in materials or workmanship under normal use and care until the expiration of the warranty period. Goods are warranted for ten (10) years from the date of manufacture. Products purchased by RTI from a third party for resale to Distributor and/or its customers (each a "Buyer") ("Resale Products") shall carry only the warranty extended by the original manufacturer. Buyer agrees that RTI has no liability for Resale Products beyond making a reasonable commercial effort to arrange for procurement and shipping of the Resale Products. If Buyer discovers any warranty defects and notifies RTI thereof in writing during the applicable warranty period, RTI shall, at its option, repair or replace FOB point of manufacture that portion of the Goods found by RTI to be defective, or refund the purchase price of the defection portion of the Goods. Failure by Buyer to give such written notice within the applicable time period specified above shall be deemed an absolute and unconditional waiver of the Buyer's claims for such defects. All replacements or repairs necessitated by inadequate maintenance, normal wear and usage, unsuitable power sources or environmental conditions, accident, misuse, improper installation, modification, repair, storage or handling, or any other cause not the fault of RTI are not covered by this limited warranty, and shall be at Buyer's expense. RTI shall not be obligated to pay any costs or charges incurred by Buyer or any other party except as may be agreed upon in writing in advance by RTI. All costs of dismantling, reinstallation, and freight and the time and expenses of RTI's personnel and representatives for site travel and diagnosis under this warranty clause shall be borne by Buyer unless accepted in writing by RTI. Goods repaired and parts replaced by RTI during the warranty period shall be in warranty for the remainder of the original warranty period or ninety (90) days, whichever is longer. This limited warranty is the only warranty made by RTI and can be amended only in writing signed by RTI. THE WARRANTIES AND REMEDIES SET FORTH ABOVE ARE EXCLUSIVE. THERE ARE NO REPRESENTATIONS OR WARRANTIES OF ANY KIND, EXPRESS OR IMPLIED, AS TO MERCHANTABILITY, FITNESS FOR PARTICULAR PURPOSE OR ANY OTHER MATTER WITH RESPECT TO ANY OF THE GOODS OR SERVICES

2. LIMITATION OF REMEDY AND LIABILITY: RTI SHALL NOT BE LIABLE FOR DAMAGES CAUSED BY DELAY IN PERFORMANCE. THE REMEDIES OF BUYER SET FORTH ABOVE ARE EXCLUSIVE. IN NO EVENT, REGARDLESS OF THE FORM OF THE CLAIM OR CAUSE OF ACTION (WHETHER BASED IN CONTRACT, INFRINGEMENT, NEGLIGENCE, STRICT LIABILITY, OTHER TORT OR OTHERWISE), SHALL RTI'S LIABILITY TO BUYER AND/OR ITS CUSTOMERS EXCEED THE PRICE TO BUYER OF THE SPECIFIC GOODS MANUFACTURED BY RTI GIVING RISE TO THE CLAIM OR CAUSE OF ACTION. BUYER AGREES THAT IN NO EVENT SHALL RTI'S LIABILITY TO BUYER AND/OR ITS CUSTOMERS EXTEND TO INCLUDE INCIDENTAL, CONSEQUENTIAL OR PUNITIVE DAMAGES. THE TERM "CONSEQUENTIAL DAMAGES" SHALL INCLUDE, BUT NOT BE LIMITED TO, LOSS OF ANTICIPATED PROFITS, REVENUE OR USE AND COSTS INCURRED INCLUDING WITHOUT LIMITATION CAPITAL, FUEL AND POWER, AND CLAIMS OF BUYER'S CUSTOMERS. RTI shall not be liable for and Buyer assumes all liability for, all personal injury (including without limitation death) and property damage in connection with or arising from the handling, transportation, possession, processing, further manufacture, other use or resale of the Goods, whether the Goods are used alone or in combination with any other material. Neither transportation charges for the return of the Goods nor any other costs, charges or expenses incurred by Buyer will be paid by RTI unless authorized in advance and in writing by RTI. All Goods returned for repair are to be shipped prepaid for the account of the Buyer by a mode of transportation approved by RTI. If RTI furnishes technical or other advice to Buyer, whether or not at Buyer's request, with respect to processing, further manufacture, or other use or resale of the Goods, RTI shall not be liable for, and Buyer assumes all risk of, such advice and the results thereof.

3. Emerson Process Management Regulator Technologies, Inc. and their affiliated entities assume no responsibility for the selection, use or maintenance of any product. Responsibility for proper selection, use and maintenance of any product remains solely with the purchaser and end user.

4. The pricing information contained herein is "Confidential" and shall not be disclosed to third parties. While every attempt has been made to assure the accuracy and completeness of the information contained herein, RTI offers no warranty or guarantee, express or implied, regarding the information. All sales are governed by RTI's terms and conditions of sale, which are available upon request. RTI reserves the right to (i) modify and/or improve its designs or specifications of its products; (ii) discontinue its products; and/or (iii) modify its pricing, without notice, at any time.

The Emerson logo is a trademark and service mark of Emerson Electric Co. All other marks are the property of their prospective owners. Fisher™ is a mark owned by Fisher Controls International LLC, a business of Emerson Automation Solutions.

Index

INDEX

Series / Type No.	Page No.
50	45
64	31
64SR	31
67C	30
99	34/40
133	40
289H	43
299H	40
627	32
630	32
63EGLP	71
749B-21	41
803	41
912	44
1098	35
1301F	32
1805	43
C404-32	55
C407-10	47
C471	47
C477	47
C483	53
C484	53
C486	47
C800	48/56
CS200	36
CS400	36
CS403	38
CS404	38
CS404	38
CS800	36
CS803	38
D	79
F100	67
G	78
H100	74
H284	69
H722	68
H733	68
H5114	69
H5118	68
HSRL	26
J	82
M	83
MR98H	43
N100	80
N110	81
N120	81
N201	87
N301	75
N310	75
N350	75
N401	75
N410	75
N450	75
N480	79
N551	61
N563	65
N564	65
N600/700	76
P	59
P120B	87
P600	60
P700	60
R122H	25
R130	41
R222	25
R222H	25
R232A	28
R232E	29
R622	26
R622E	27
R622H	25
R632A	28
R632E	29
R642	26
R652	26
R652E	27
Y602	44

WARNING

The contents of this publication are presented for informational purposes only, and while every effort has been made to ensure their accuracy, they are not to be construed as warranties or guarantees, express or implied, regarding the products or services described herein or their use or applicability. We reserve the right to modify or improve the designs or specifications of such products at any time without notice.

NOTICE: See individual product instruction manuals supplied with the product for more detailed information. Contact Emerson or your local LPG Regulators and Equipment Distributor if you have additional product questions.

WARNING: Fisher™ equipment must be installed, operated and maintained in accordance with federal, state and local codes, and Fisher instructions. The installation in most states must also comply with National Fire Protection Association 54 and 58 standards.

Only personnel trained in the proper procedures, codes, standards, and regulations of the LPG or Anhydrous Ammonia (NH_3) industries should install and service this equipment.

Due to normal wear or damage that may occur from external sources, Fisher equipment must be inspected and maintained periodically. The frequency of inspection and replacement of equipment depends upon the severity of the service conditions or age requirements of local, state, federal regulations and Fisher instructions.

Do not use any Fisher equipment that leaks, fails to work properly or that has damaged or missing parts. Equipment repair or replacement should be made promptly in order to prevent accidents.

Failure to follow these instructions or to properly install and maintain this equipment could result in an explosion and/or fire causing property damage, personal injury or death.

EMERSON

The Fisher™ LPG App

The most commonly used references and training for the propane professional now available on your mobile device



FEATURES INCLUDE

Offline Access
Product Catalogs, Pages, Handbooks, and White-papers

Regulator Selector Guide
Based on input of process conditions

Pipe Size Tool
Based on inputs of flow and pipe length

Resources
Training Videos and Product Animations

Download on the App Store

GET IT ON Google Play

EMERSON

Fisher™ LP-Gas Technologies

Regulators and Equipment, LPG/NH_3

LP-31 Buyer's Guide



FISHER™

Our distribution network offers a full complement of sales and support staff, and more than 2000 technical experts strategically located across nearly 200 locations.

Emerson

Americas
T +1 800 558 5853
T +1 972 548 3574

Europe
T +39 051 419 0611

Asia Pacific
T +65 6777 8211

Middle East / Africa
T +971 4811 8100

webadmin.regulators@emerson.com
Emerson.com
Facebook.com/EmersonAutomationSolutions
LinkedIn.com/emerson-final-control
X.com/EMR_Automation

D450104T012 © 2009, 2025 Emerson Process Management Regulator Technologies, Inc. All rights reserved. 10/25.
The Emerson logo is a trademark and service mark of Emerson Electric Co. All other marks are property of their respective owners.
Fisher™ is a mark owned by Fisher Controls International, LLC, an Emerson Company.

EMERSON™